YOKU ENERGY (ZHANGZHOU) CO., LTD.

Specification Approval Sheet

Name: ***Lithium Polymer Battery***

Model: **482335**

SPEC: **3.7V/300mAh**

Number: **YKZ0904250319Y**

Approved By	Checkup	Make

	Signature	Date
Customer Confirmation		
	Company Name:	
	Stamp:	

Add: YOKU Industrial Zone Nangjing Zhangzhou Fujian

Tel: 86-596-7666111 Fax: 86-596-7666222

Specification Modification Records

Modification Time	Descriptions	Issued Date	Approved By
0	New release	2009-04-25	

Content

1. Scope ……4

2. Model Type……4

3. Specification……..4

4. Battery Cell Performance Criteria……..5

5. Storage and Others……...6

6. Drawing (not to scale)……...…7

Handling Precautions and Guidelines……..…8

1. Charging……..……....8

2. Discharging……...8

3. Discharging Temperature……..……..9

4. Over-Charged……..…....9

5. Protection Circuit Module (PCM)……..……...9

6. Storage……..……9

7. Notice for Designing and Assembling Battery Pack……...9

8. Other Notice……11

▲ Special Notice……....11

Any copies are invalid without our company's approval

1. Scope:

This document describes the Product Specification of a chargeable Lithium Polymer Battery produced by Yoku Energy (Zhang zhou) Co., Ltd.

2. Model: 482335

3. Cell parameters Index:

3.1 Single cell parameters

No.	Item	Spec	Note
1	**Model**	482335/300mAh	
2	**Charge Voltage**	4.2V	
3	**Nominal Voltage**	3.7V	Cell Voltage between 3.6V ~3.9V before shipping
4	**Nominal Capacity**	≥300mAh@ 0.2C Discharge	Nominal Capacity refers to the capacity measured at 0.2C discharge with 2.75V cut-off voltage, after standard charging
5	**Cycle Life**	≥ 300Times	One cycle refers to one charge and one discharge period. Test condition: Charge: 0.2C to 4.2V Discharge: 0.2C to 2.75V The cycle life is the number of cycles before the discharge capacity reaches 80% of the rated capacity.
6	**Self-discharge**	Residual Capacity>90%	After standard charging, stored at 25°C±5°C for 30 days. Capacity is then measured per item 4 conditions.
7	**Impedance**	≤200mΩ	After standard charging, measure the internal resistance at 1KHz AC
8	**Max. Charge Current**	1.0C	
9	**Max. Discharge Current**	1.0C	
10	**Discharge Cut-off Voltage**	2.75V	
11	**Operating Temperature**	Discharge:-10ºC~ +60ºC Charge: 0ºC~ +45ºC	Cells must be stored at 3.6V-3.9V. Over long storage periods cells should be cycled every 90 days. The method is to do a charge-discharge cycle with standard method, then charge to 3.7—3.9V.
12	**Storage Temperature**	-20ºC~+45ºC	
13	**Cell Weight**	Approx 6g	
14	**Cell Dimension**	Length：36mm Max Width：23.5mm Max Thickness：5mm Max	Measured weight of 300g at 25℃± 5℃. Not including Tabs

4. Electronic Characteristics test and inspection:

4.1 Standard testing environment

Unless specifically stated otherwise, tests must be done within one month of delivery and the number of charging-recharging cycles is fewer than 5.

Test conditions:

Ambient Temperature： 25ºC ± 5ºC

Ambient Humidity： 65 ± 20%

4.2 The requirements of measurement instruments

(1) The measurement instrument has been certified by a qualified source.
(2) The accuracy of the measuring instrument is at least 0.01mm.
(3) The accuracy of multimeter is at least 0.5%. While measuring the voltage, the internal resistance can not be less than 10KΩ.
(4) The principle internal resistance is 1KHz LCR; the accuracy is 0.2%.
(5) The internal resistance can vary based upon temperature and the charging mode. It is relevant to the PTC and the length and resistance of the wiring.
(6) The current accuracy of the battery test system is at least ±0.1%, isobarically accuracy is ±0.5%, and timer accuracy is less than ±0.1%.
(7) The accuracy of the thermometer is at least ±0.5ºC.

4.3 Visual inspection

Any visual defects which will affect the electronic characteristics, such as leakage and damage, are not obvious.

4.4 Charge/Discharge Methods and Test Conditions

No.	Item	Testing Condition and Method
1	**Charging Current**	Standard CC: 0.2C Quick CC: 0.5C
2	**Standard Charging**	Constant Current Charging at 0.2C to 4.2V. Constant Voltage Charging at 4.2V to cut-off current≤0.05C
3	**Quick Charging**	Constant Current Charging at 0.5C to 4.2V. Constant Voltage Charging at 4.2V to cut-off current≤0.05C
4	**Standard Discharge**	Constant discharge at 0.2C to cut-off voltage of 2.75V.
5	**Charging Time**	Standard charging time: 8 hours Quick charging time: 2.5 hours
6	**Temperature & Humidity**	Standard charging: 0ºC~ 45ºC 45~85% RH Quick charging: 10ºC~ 45ºC 45~85%RH Standard discharging: -10ºC~ 60ºC 45~85% RH
7	**Open Voltage**	3.6~3.9V (before shipping)

Notes: The maximum charging voltage shall not exceed 4.25V. The Max. protection voltage designed into the PCM board must not be more than 4.3V.

4.5 Mechanical Characteristics

No.	Item	Testing Conditions and Method	Standard
1	**Vibration Test**	After standard charging, the cell is secured to a vibration table and subjected to vibration cycling in which the frequency is varied at the rate of 1Hz per minute between 10Hz and 55Hz; the excursion of the vibration is 0.38mm. The cell shall be vibrated for 30 minutes on each of X, Y, and Z axis.	No leakage. Remaining capacity is ≥90% after 3 hours.
2	**Drop Test**	The cell is dropped from a height of 1 meter two times onto a concrete surface.	No explosion, fire, or leakage

4.6 Safety Test

No.	Item	Testing Conditions and Method	Standard
1	**Over-charge**	Charging is conducted for 8 hours while the voltage is held at 4.6V.	No deformation or leakage
2	**Short-circuit**	The charged battery is short-circuited for 1 hour at 100mΩ.	No explosion or fire
3	**Heat shock**	The cell is placed in a thermal chamber. Temperature is raised to 120±2ºC at the rate of (5±2ºC)/min and held for 10 minutes, then cooled to room temperature at the rate of 5±2ºC/min.	No explosion or fire
4	**Humidity and heat test**	A charged battery is placed in a box for 48 hours where the temperature is 40ºC±2ºC and the relative humidity is 90%～95% .	No smoke or explosion

4.7 High and low temperature test

No	Item	Testing Conditions and Method	Standard
1	**High Temperature**	A charged battery is placed in an oven for 2 hours at 55ºC±2ºC, then discharged at a 0.5C current until the voltage is 2.75V.	Discharge 90 percent of the original capacity.
2	**Low Temperature**	A charged battery is placed in a thermal chamber for 16 to 24 hours at -10ºC±2ºC; then discharged at 0.1C until 2.75V is reached	Discharge more than 45 percent of the original capacity.

4.8Electricity maintenance

No	Item	Testing Conditions and Method	Standard
1	**Electricity Maintenance**	A charged battery sits for 28 days at ambient temperature of 25ºC±5ºC and is then discharged to the termination voltage.	Discharge more than 85 percent of the original capacity.

5. Storage and Others

5.1 Longterm Storage

If the cell is to be stored for 3 months or longer it should be held in a dry and cool environment. Voltage during storage needs to me maintained between 3.6V and 3.9V and the storage conditions are the same as Item 4.1.

5.2 Any issues not covered in this specification should be discussed between the customer and Yoku.

6. Drawing

6.1 Assembly diagram (not to scale)

Model: 482335

Unit: mm

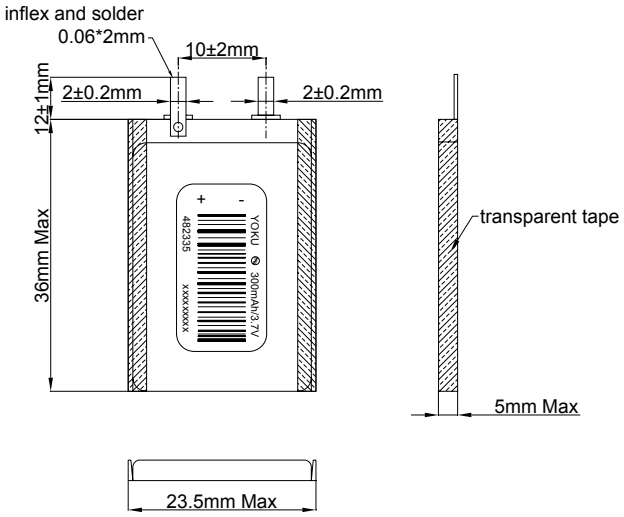

Handling Precautions and Guidelines

For LIP (Lithium-Ion Polymer) Rechargeable Batteries

Preface

This document of 'Handling Precautions and Guidelines for LIPO Rechargeable Batteries' shall be applied to the battery cells manufactured by Yoku Energy (Zhang zhou) Co., Ltd.

Note (1): The customer is requested to contact Yoku in advance if and when the customer needs variations of the operating conditions described in this document. Additional experimentation may be required to verify performance and safety under such conditions.

Note (2): Yoku will take no responsibility for any accident when the cell is used under conditions outside of this specification.

Note (3): Yoku will inform the customer in writing of improvement(s) regarding proper use and handling of the cell if it is deemed necessary. Yoku Energy reserves the right to revise this specification before the customer signs the datasheet. If a revision is required, YOKU will notify the customer.

1. Charging

1.1 Charging Current:

The charging current must be less than the maximum charge current specified in the Specification Approval Sheet.

1.2 Charging Voltage:

The charging voltage must be less than the maximum nominal voltage 4.2V, and the charging voltage upper limit is 4.30V (single pack).

1.3 Charging Temperature:

The cell must be charged within the range specified in this Specification Approval Sheet.

1.4 Notes:

Since charging is done with a constant current or a constant voltage, reverse charging is prohibited. If the cell is connected improperly it cannot be charged. Reverse charging can damage the cell and lead to degradation of cell performance, impair cell safety, and cause heat generation or leakage.

2. Discharging Current:

The cell shall be discharged at less than the maximum discharge current specified in the Specification Approval Sheet. A high discharging current may reduce the discharge capacity significantly or cause overheating.

3. Discharging Temperature

The Discharging Temperature must be within the range specified in this Specification Approval Sheet.

4. Over-Discharge

Over-discharging will cause cell degradation and functional losses. The cell can degrade into an over-discharge state through self discharging. In order to prevent over-discharging, the cell should be charged periodically to retain between 3.6V and 3.9V.

5. Protective Circuit Module

5.1 The cell/battery pack shall contain a PCM that can protect the cell/ battery pack properly.

The PCM shall have functions of:

(1) Overcharging prevention

(2) Over-discharging prevention

(3) Over current prevention to maintain safety and prevent significant deterioration of cell performance. Over current can occur by an external short circuit which circumvents the PCM.

5.2 Overcharging Protection

Overcharging prevention stops charging if any cell of the battery pack reaches 4.30V.

5.3 Over-discharging protection

The Over-discharging protection monitors the voltage of every cell in the pack and works to avoid a drop in the cell voltage to 2.8V or less.

6. Storage

Cells should be stored at the proper temperature that is identified in the Specification Approval Sheet.

7. Notice⚠

7.1 Handling of cells:

★ Avoid any short-circuit. It will cause the leads to get hot and lose electronic functions.

★ Soft package is easily damaged by sharp objects such as needles and knives. Avoid touching the cells with sharp objects when handling and storing.

★ Next to the leads is the sealed edge. Don’t bend or fold the sealing edge as it is sensitive to movement.

★ Don’t open the folded edge on the sides of the cell.

★ Don’t bend the tabs as the tabs are sensitive.

★ Avoid mechanical shock to the cells.

★ Don’t put the cells into an oven, washing machine or any high-voltage container.

★ Don't use a charger without a safety certification. Use only a recommended charger.
★ You should immediately stop charging if the cell overheats, emits an odor, changes color, changes shape, etc.
★ Adults should supervise the use of batteries by children.
★ Before using batteries, please carefully read and understand the handling guidelines.
★ Avoid electro-static discharge when using, charging, and storing cells. Avoid putting the battery in contact with metal conductors such as neck chains, barrettes, or bolts, etc.
★ Don't use metal conductors to connect the positive and negative leads together.
★ Avoid errors during assembly by contacting the positive lead with the negative lead.

7.2 Notice for Designing Battery Pack

7.2.1 Package Design

- The battery pack should have sufficient strength and the battery should be protected from mechanical shock.
- No sharp objects should be inside the pack containing the battery.

7.2.2PCM Design

- The overcharge threshold voltage should not exceed 4.30V (single pack).
- The over-discharge threshold voltage should not be lower than 2.80V (single pack).
- The PCM should have short circuit protection.

7.3 Notice for Assembling Battery Pack

7.3.1 Tab connection

- Ultrasonic welding or spot welding is recommended to connect the battery with the PCM or other parts.
- If the tab is to be soldered to the PCM, the instructions below are very important to ensure battery performance.
  a. The solder iron should be temperature controlled and ESD safe.
  b. Soldering temperature should not exceed 360±10ºC.
  c. Soldering time should not be longer than 3 seconds.
  d. Let the battery tab cool down before soldering again.
  e. Direct heat to the cell body is strictly prohibited. The battery will be damaged by heat above approx. 60ºC.

7.3.2 Cell fixing

(1) The cell should be fixed to the battery pack by its large surface area.
(2) There should be no sharp edges at the assembly contact area.
(3) Cells must be held firmly in the battery pack; movement is not allowed.

8. Others

8.1 Disassembly may cause an internal short circuit to the cell, which may cause out-gassing, fire, or other problems.

8.2 Prohibition of dumping of cells into fire

Never incinerate or dispose of the cells in a fire as this may cause the cells to catch fire.

8.3 The cells should never be exposed to liquids such as water, drinks or oil.

8.4 Do not mix the cells from different manufacturers in a common pack. Do not mix new cells with old ones.

▲**Special Notice: If the cell isn't used for a long time, please keep the cells in a half-charged state neither fully charged and not completely discharged. Recharge the cells and use half of the power after 2-3 months. Store the cells in a cool and dry place. It will protect the cell from damage.**