EDLC 2.7V 500F

FEATURES

Electric double layer capacitor
Higher power density with ultra low ESR
Semi-permanent, quick charge and discharge than batteries
Suitable for short-term peak power assistance application
UL and ISO/TS certificated, RoHS compliant
Radial design with 4-pin snap-in terminal type

DIMENSIONS

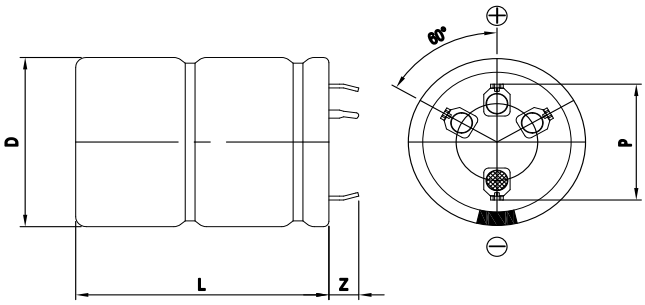

Dimensions in mm			
D +1.5 Max	L ± 2.0	Z ± 1.0	P ± 0.2
Φ35.0	82.0	6.0	23.0

This drawing is not to be scaled.

SPECIFICATIONS

Part Number	Rated Voltage, V_R (V)	Rated Capacitance (F)	AC ESR 1kHz (mΩ)	DC IR (mΩ)	Maximum Current (A)	Leakage Current (㎃)	Stored Energy (J)	Dimension D x L (mm)	Weight (g)
VEC 2R7 507 QG	2.7	500.	3.00	4.50	205.	1.000	1,822.5	35.0 x 82.0	96.0

* Maximum Current: 1 second discharge to ½·V_R
* Leakage Current: After 72hours at V_R and 25℃

Item	Characteristics	Remarks
Rated Voltage(V_R)	2.7V	
Capacitance Tolerance	-10 ~ 30%	
Operating Temperature (T_{min} ~ T_{max})	-40 ~ +65℃	|Δcap| ≤ 30% of initial value at 25℃ |ΔESR| ≤ 100% of specified value at 25℃ After 1,000 hours application of V_R at T_{max}
Storage Temperature	-40 ~ 70℃	
Cycle Life	500,000 cycles	|Δcap| ≤ 30% of initial value at 25℃ |ΔESR| ≤ 100% of specified value at 25℃ Cycles from V_R to ½·V_R under constant current at 25℃
Shelf Life	2 years	|Δcap| ≤ 10% of initial value at 25℃ |ΔESR| ≤ 50% of specified value at 25℃ Without electrical charge under T_{max}

Tel: +82-31-455-3064 E-mail: hycap@vina.co.kr Web: www.vina.co.kr
Design and specifications are subjected to change without notice.
version 9.1 on November 23, 2015