VARTA Microbattery

mobility for you

This is a controlled document.
Hardcopy to be endorsed by authorized person.
Check with Issuing Office or SAP system for latest update.

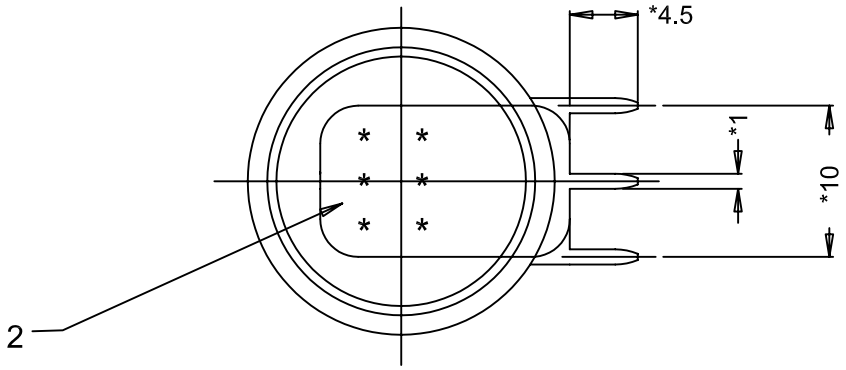

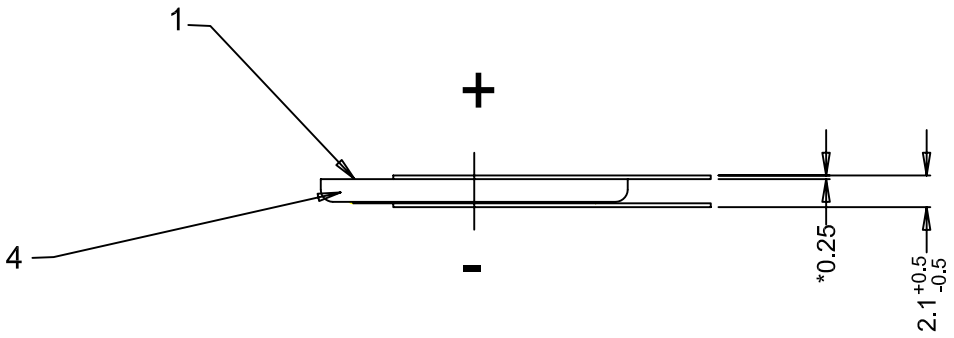

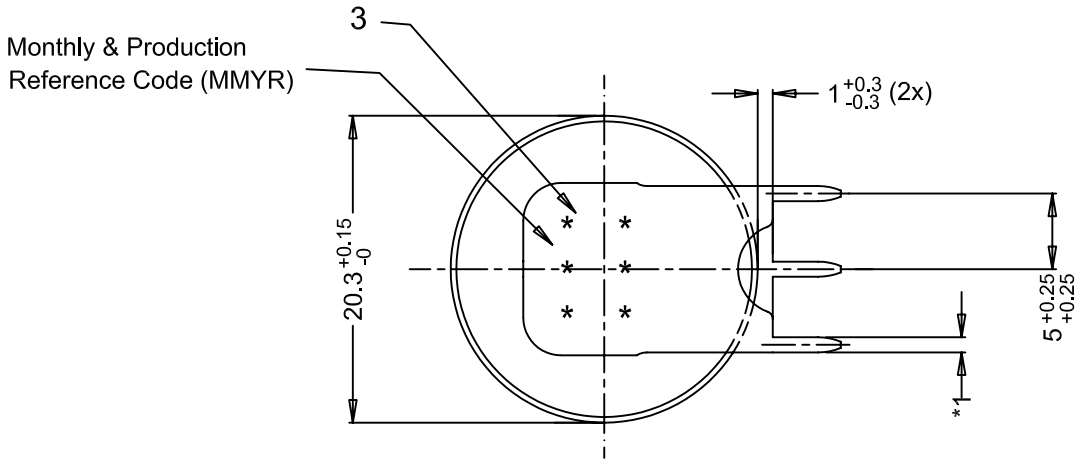

Note: * Dimension for reference only

No	AO No	Revisions	1	Date	Name
3	R113/04	Change date code to MMYR was MMYY to identification the laser machine		2004-12-22	Ratna
2	T18/01	To add the date code area for Lithium coin		2001-03-08	Yeni
1	T141/00	To change weld spot to 6 was 4		2000-11-11	Ratna

Projection:	Material: Refer to part list no: 004167	Description: CR 2016 battery with casing & solder tags	
Dimensions in mm	Prepared & Checked	Verified & Approved	Dwg. No: 004167 — 4 0 3
Tolerance: As specified	2000-07-01 Titis WS		
Scale: 2 : 1			VKB Order No: 06016 201 501

Rights reserved to make technical changes, as a result of further development, without notice. This drawing is the property of VARTA Microbattery and must not be copied or disclosed to a third party without the written consent of VARTA Microbattery.

VARTA