This is controlled document.
Hardcopy to be endorsed by authorized person.
Check with Issuing Officer or SAP system for latest update.

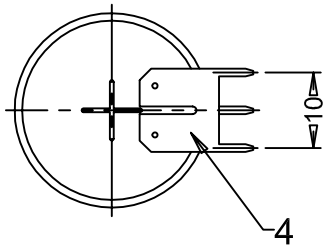

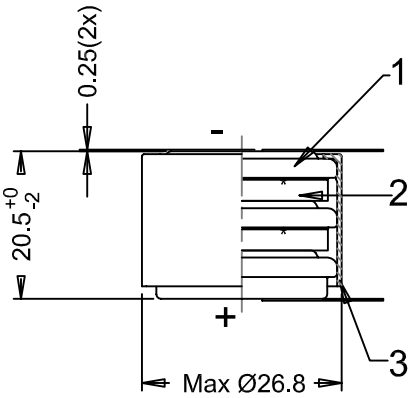

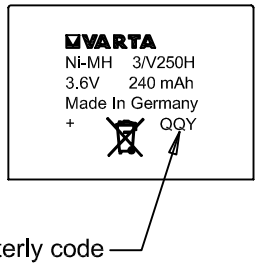

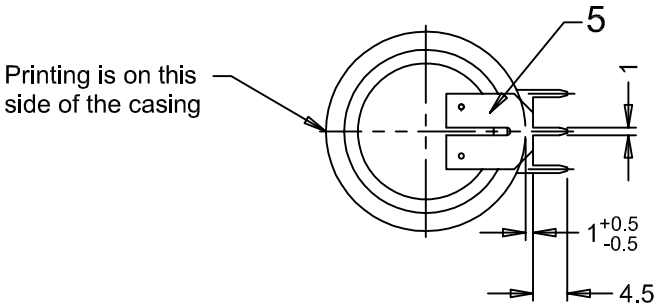

Note: No welding onto the groove

No	AO No	Revisions	Date	Name
1	R332/08	Add cross wheeled bin	2008-10-11	Eka

Projection:	Material: Refer to part list no: 070838			Description: 3/V250H battery with snap-on plastic casing & solder tags
Dimensions in mm	Prepared & Checked		Verified & Approved	Dwg. No: 070838 — 4 0 1
Tolerance: As specified	1997-08-21	A.P.ANG		
Scale: 1 : 1				VKB Order No: 55625 603 059

Rights reserved to make technical changes, as a result of further development, without notice. This drawing is the property of VARTA Microbattery and must not be copied or disclosed to a third party without the written consent of VARTA Microbattery.

VARTA