AMC1200/B Fully-Differential Isolation Amplifier

1 Features

- ±250-mV Input Voltage Range Optimized for Shunt Resistors
- Very Low Nonlinearity: 0.075% Maximum at 5 V
- Low Offset Error: 1.5 mV Maximum
- Low Noise: 3.1 mV_{RMS} Typical
- Low High-Side Supply Current: 8 mA Maximum at 5 V
- Input Bandwidth: 60 kHz Minimum
- Fixed Gain: 8 (0.5% accuracy)
- High Common Mode Rejection Ratio: 108 dB
- 3.3-V Operation on Low-Side
- Certified Galvanic Isolation:
  - UL1577 and VDE V 0884-10 Approved
  - Isolation Voltage: 4250 V_{PEAK} (AMC1200B)
  - Working Voltage: 1200 V_{PEAK}
  - Transient Immunity: 10 kV/µs Minimum
- Typical 10-Year Lifespan at Rated Working Voltage (see Application Report SLLA197)
- Fully Specified Over the Extended Industrial Temperature Range

2 Applications

- Shunt Resistor Based Current Sensing in:
  - Motor Control
  - Green Energy
  - Frequency Inverters
  - Uninterruptible Power Supplies

3 Description

The AMC1200 and AMC1200B are precision isolation amplifiers with an output separated from the input circuitry by a silicon dioxide (SiO_2) barrier that is highly resistant to magnetic interference. This barrier has been certified to provide galvanic isolation of up to 4250 V_{PEAK} (AMC1200B) or 4000 V_{PEAK} (AMC1200) according to UL1577 and VDE V 0884-10. Used in conjunction with isolated power supplies, these devices prevent noise currents on a high common mode voltage line from entering the local ground and interfering with or damaging sensitive circuitry.

The input of the AMC1200 or AMC1200B is optimized for direct connection to shunt resistors or other low voltage level signal sources. The excellent performance of the device supports accurate current control resulting in system-level power saving and, especially in motor-control applications, lower torque ripple. The common mode voltage of the output signal is automatically adjusted to either the 3-V or 5-V low-side supply.

The AMC1200 and AMC1200B are fully specified over the extended industrial temperature range of –40°C to 105°C and are available in a wide-body SOIC-8 package (DWV) and a gullwing-8 package (DUB).

Device Information(1)

PART NUMBER	PACKAGE	BODY SIZE (NOM)
AMC1200, AMC1200B	SOP (8)	9.50 mm × 6.57 mm
	SOIC (8)	5.85 mm × 7.50 mm

(1) For all available packages, see the orderable addendum at the end of the data sheet.

Simplified Schematic

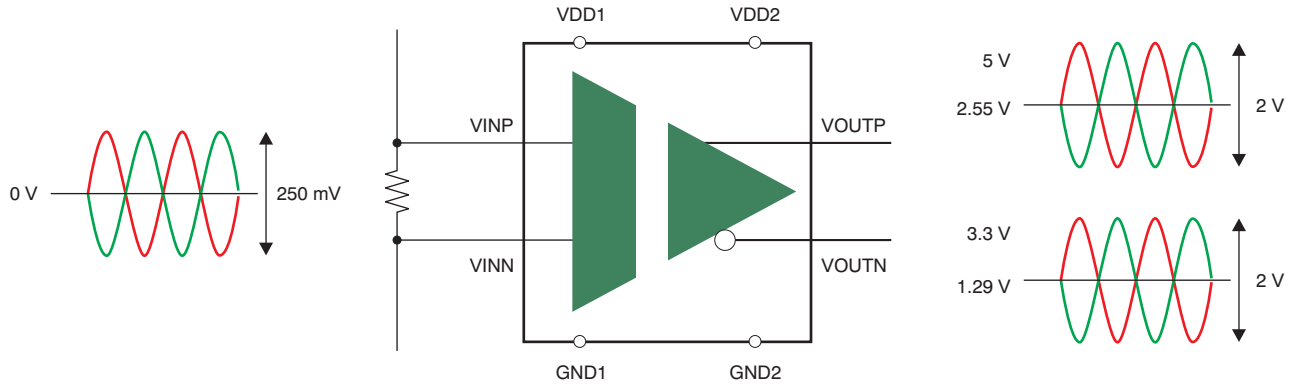

An IMPORTANT NOTICE at the end of this data sheet addresses availability, warranty, changes, use in safety-critical applications, intellectual property matters and other important disclaimers. PRODUCTION DATA.

Table of Contents

1 **Features** ... 1
2 **Applications** ... 1
3 **Description** ... 1
4 **Revision History** ... 2
5 **Pin Configuration and Functions** ... 3
6 **Specifications** ... 4
6.1 Absolute Maximum Ratings ... 4
6.2 ESD Ratings ... 4
6.3 Recommended Operating Conditions ... 4
6.4 Thermal Information ... 4
6.5 Electrical Characteristics ... 5
6.6 Typical Characteristics ... 6
7 **Detailed Description** ... 11
7.1 Overview ... 11
7.2 Functional Block Diagram ... 11
7.3 Feature Description ... 11
7.4 Device Functional Modes ... 13
8 **Application and Implementation** ... 15
8.1 Application Information ... 15
8.2 Typical Applications ... 15
9 **Power Supply Recommendations** ... 18
10 **Layout** ... 18
10.1 Layout Guidelines ... 18
10.2 Layout Example ... 19
11 **Device and Documentation Support** ... 20
11.1 Documentation Support ... 20
11.2 Related Links ... 20
11.3 Community Resources ... 20
11.4 Trademarks ... 20
11.5 Electrostatic Discharge Caution ... 20
11.6 Glossary ... 20
12 **Mechanical, Packaging, and Orderable Information** ... 21

4 Revision History

NOTE: Page numbers for previous revisions may differ from page numbers in the current version.

Changes from Revision C (September 2013) to Revision D	Page
• Added *ESD Ratings* table, *Feature Description* section, *Device Functional Modes*, *Application and Implementation* section, *Power Supply Recommendations* section, *Layout* section, *Device and Documentation Support* section, and *Mechanical, Packaging, and Orderable Information* section	1

Changes from Revision B (August 2012) to Revision C	Page
• Deleted device graphic	1
• Added DWV (SOIC-9) package to document	1
• Changed last paragraph of *Description* section	1
• Added DWV pin out drawing	3
• Added DWV column to Thermal Information table	4
• Added row for DWV package to *L(I01)* and *L(I02)* parameters in Package Characteristics table	12

Changes from Revision A (August 2011) to Revision B	Page
• Changed Isolation Voltage feature bullet	1
• Added AMC1200B device to data sheet	1
• Changed title for Figure 25	10
• Changed CTI parameter minimum value in Electrical Characteristics from ≥ 175 to ≥ 400	12

Changes from Original (April 2011) to Revision A	Page
• Changed sign for maximum junction temperature from minus to plus (typo)	4
• Added "0.5-V step" to test condition for Rise/fall time parameter	5
• Changed Figure 12	6
• Changed Figure 13	7
• Changed surge immunity parameter from ±4000 to ±6000	12

Copyright © 2011–2015, Texas Instruments Incorporated

5 Pin Configuration and Functions

DUB Package
8-Pin SOP
Top View

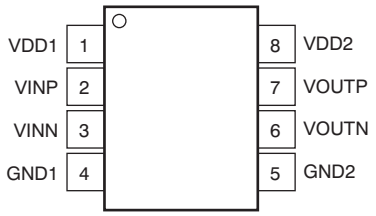

DWV Package
8-Pin SOIC
Top View

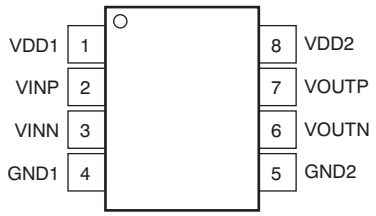

Pin Functions

PIN		I/O	DESCRIPTION
NO.	NAME		
1	VDD1	Power	High-side power supply
2	VINP	Analog input	Noninverting analog input
3	VINN	Analog input	Inverting analog input
4	GND1	Power	High-side analog ground
5	GND2	Power	Low-side analog ground
6	VOUTN	Analog output	Inverting analog output
7	VOUTP	Analog output	Noninverting analog output
8	VDD2	Power	Low-side power supply

Copyright © 2011–2015, Texas Instruments Incorporated

6 Specifications

6.1 Absolute Maximum Ratings

Over the operating ambient temperature range, unless otherwise noted.[1]

	MIN	MAX	UNIT
Supply voltage, VDD1 to GND1 or VDD2 to GND2	–0.5	6	V
Analog input voltage at VINP, VINN	GND1 – 0.5	VDD1 + 0.5	V
Input current to any pin except supply pins	–10	10	mA
Maximum junction temperature, T_J Max		150	°C
Storage Temperature, T_{stg}	–65	150	°C

(1) Stresses beyond those listed under *Absolute Maximum Ratings* may cause permanent damage to the device. These are stress ratings only, and functional operation of the device at these or any other conditions beyond those indicated is not implied. Exposure to absolute maximum rated conditions for extended periods may affect device reliability.

6.2 ESD Ratings

		VALUE	UNIT
$V_{(ESD)}$ Electrostatic discharge	Human-body model (HBM) JEDEC standard 22, test method A114-C.01[1]	±2500	V
	Charged-device model (CDM), per JEDEC specification JESD22-C101[2]	±1000	

(1) JEDEC document JEP155 states that 500-V HBM allows safe manufacturing with a standard ESD control process.
(2) JEDEC document JEP157 states that 250-V CDM allows safe manufacturing with a standard ESD control process.

6.3 Recommended Operating Conditions

over operating free-air temperature range (unless otherwise noted)

		MIN	NOM	MAX	UNIT
T_A	Operating ambient temperature range	–40		105	°C
VDD1	High-side power supply	4.5	5	5.5	V
VDD2	Low-side power supply	2.7	5	5.5	V

6.4 Thermal Information

THERMAL METRIC[1]		AMC1200, AMC1200B		UNIT
		DUB (SOP)	DWV (SOIC)	
		8 PINS	8 PINS	
$R_{\theta JA}$	Junction-to-ambient thermal resistance	75.1	102.8	°C/W
$R_{\theta JC(top)}$	Junction-to-case (top) thermal resistance	61.6	49.8	°C/W
$R_{\theta JB}$	Junction-to-board thermal resistance	39.8	56.6	°C/W
ψ_{JT}	Junction-to-top characterization parameter	27.2	16	°C/W
ψ_{JB}	Junction-to-board characterization parameter	39.4	55.2	°C/W

(1) For more information about traditional and new thermal metrics, see the *Semiconductor and IC Package Thermal Metrics* application report, SPRA953.

Copyright © 2011–2015, Texas Instruments Incorporated

6.5 Electrical Characteristics

All minimum/maximum specifications at T_A = –40°C to 105°C and within the specified voltage range, unless otherwise noted. Typical values are at T_A = 25°C, VDD1 = 5 V, and VDD2 = 3.3 V.

PARAMETER		TEST CONDITIONS	MIN	TYP	MAX	UNIT
INPUT						
	Maximum input voltage before clipping	VINP – VINN		±320		mV
	Differential input voltage	VINP – VINN	–250		250	mV
V_{CM}	Common mode operating range		–0.16		VDD1	V
V_{OS}	Input offset voltage		–1.5	±0.2	1.5	mV
TCV_{OS}	Input offset thermal drift		–10	±1.5	10	µV/K
CMRR	Common mode rejection ratio	V_{IN} from 0 V to 5 V at 0 Hz		108		dB
		V_{IN} from 0 V to 5 V at 50 kHz		95		dB
C_{IN}	Input capacitance to GND1	VINP or VINN		3		pF
C_{IND}	Differential input capacitance			3.6		pF
R_{IN}	Differential input resistance			28		kΩ
	Small-signal bandwidth		60	100		kHz
OUTPUT						
	Nominal gain			8		
G_{ERR}	Gain error	Initial, at T_A = 25°C	–0.5%	±0.05%	0.5%	
			–1%	±0.05%	1%	
TCG_{ERR}	Gain error thermal drift			±56		ppm/K
	Nonlinearity	4.5 V ≤ VDD2 ≤ 5.5 V	–0.075%	±0.015%	0.075%	
		2.7 V ≤ VDD2 ≤ 3.6 V	–0.1%	±0.023%	0.1%	
	Nonlinearity thermal drift			2.4		ppm/K
	Output noise	VINP = VINN = 0 V		3.1		mV_{RMS}
PSRR	Power-supply rejection ratio	vs VDD1, 10-kHz ripple		80		dB
		vs VDD2, 10-kHz ripple		61		dB
	Rise/fall time	0.5-V step, 10% to 90%		3.66	6.6	µs
	V_{IN} to V_{OUT} signal delay	0.5-V step, 50% to 10%, unfiltered output		1.6	3.3	µs
		0.5-V step, 50% to 50%, unfiltered output		3.15	5.6	µs
		0.5-V step, 50% to 90%, unfiltered output		5.26	9.9	µs
CMTI	Common mode transient immunity	V_{CM} = 1 kV	10	15		kV/µs
	Output common mode voltage	2.7 V ≤ VDD2 ≤ 3.6 V	1.15	1.29	1.45	V
		4.5 V ≤ VDD2 ≤ 5.5 V	2.4	2.55	2.7	V
	Short circuit current			20		mA
R_{OUT}	Output resistance			2.5		Ω
POWER SUPPLY						
VDD1	High-side supply voltage		4.5	5	5.5	V
VDD2	Low-side supply voltage		2.7	5	5.5	V
I_{DD1}	High-side supply current			5.4	8	mA
I_{DD2}	Low-side supply current	2.7 V < VDD2 < 3.6 V		3.8	6	mA
		4.5 V < VDD2 < 5.5 V		4.4	7	mA
P_{DD1}	High-side power dissipation			27	44	mW
P_{DD2}	Low-side power dissipation	2.7 V < VDD2 < 3.6 V		11.4	21.6	mW
		4.5 V < VDD2 < 5.5 V		22	38.5	mW

Copyright © 2011–2015, Texas Instruments Incorporated

6.6 Typical Characteristics

At VDD1 = VDD2 = 5 V, VINP = –250 mV to 250 mV, and VINN = 0 V, unless otherwise noted.

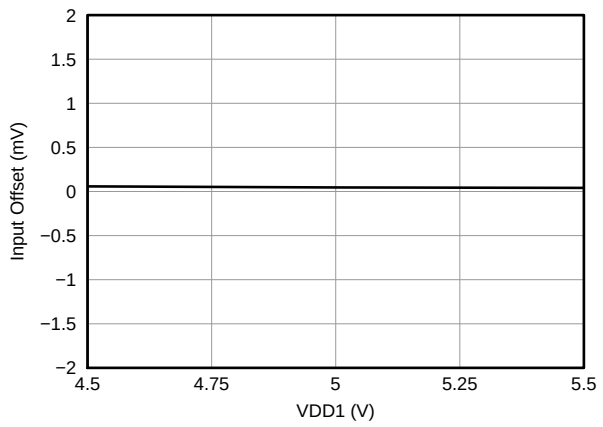

Figure 1. Input Offset vs High-Side Supply Voltage

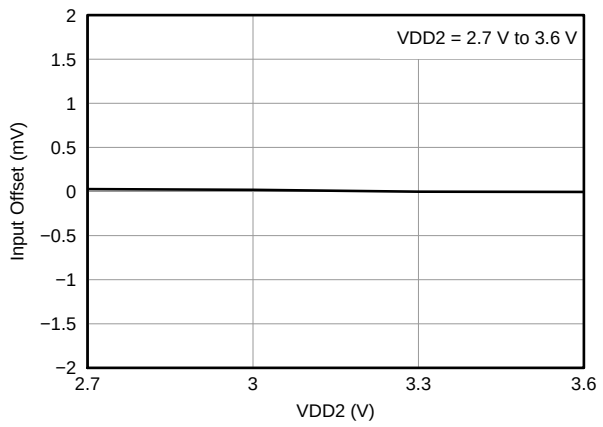

Figure 2. Input Offset vs Low-Side Supply Voltage

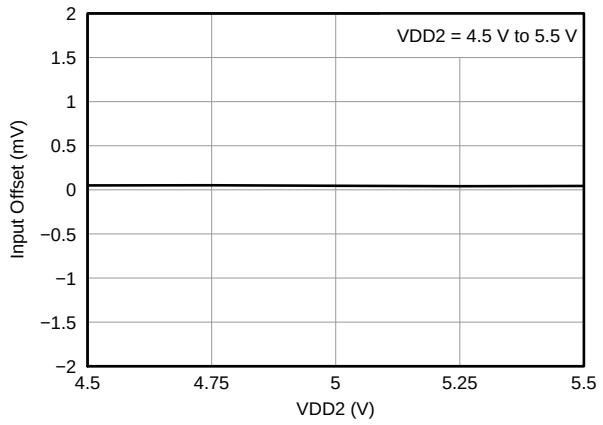

Figure 3. Input Offset vs Low-Side Supply Voltage

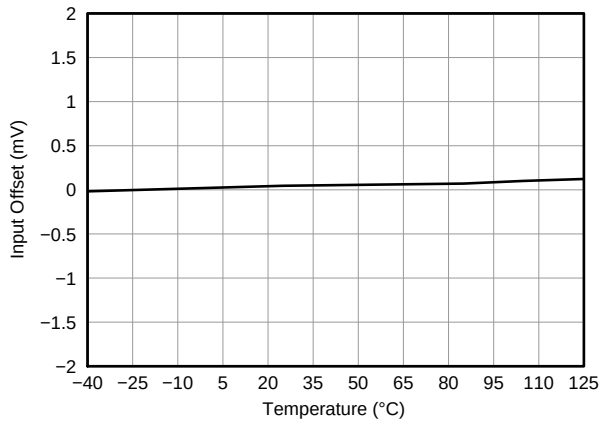

Figure 4. Input Offset vs Temperature

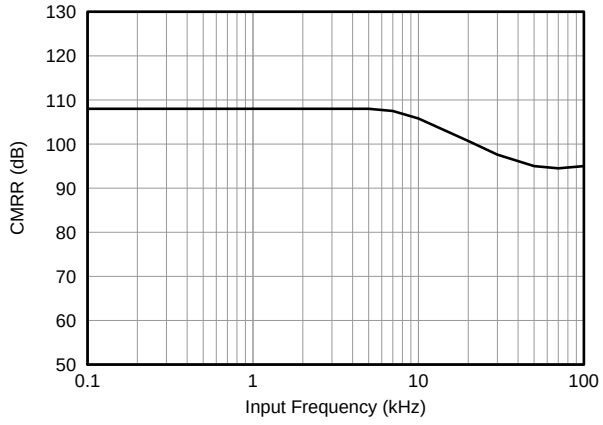

Figure 5. Common Mode Rejection Ratio vs Input Frequency

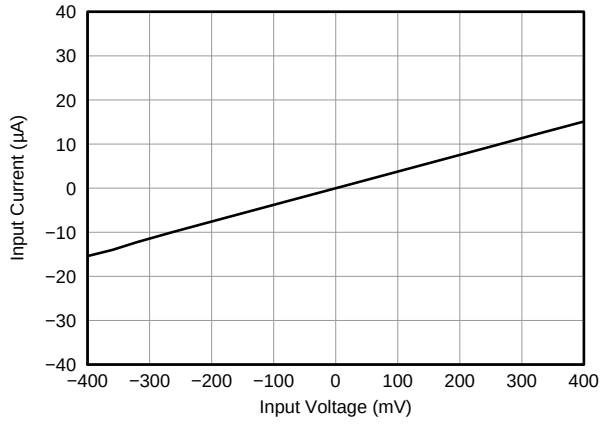

Figure 6. Input Current vs Input Voltage

Copyright © 2011–2015, Texas Instruments Incorporated

Typical Characteristics (continued)

At VDD1 = VDD2 = 5 V, VINP = –250 mV to 250 mV, and VINN = 0 V, unless otherwise noted.

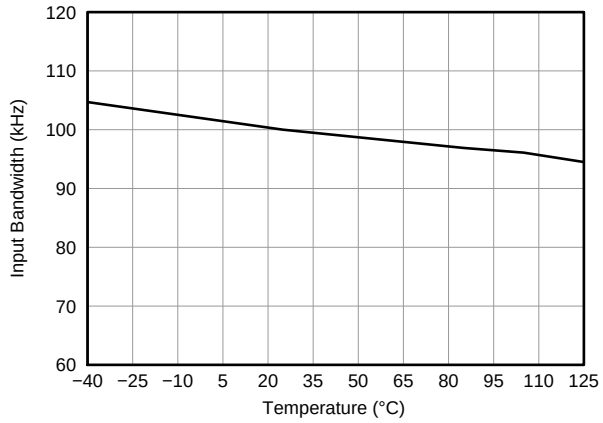

Figure 7. Input Bandwidth vs Temperature

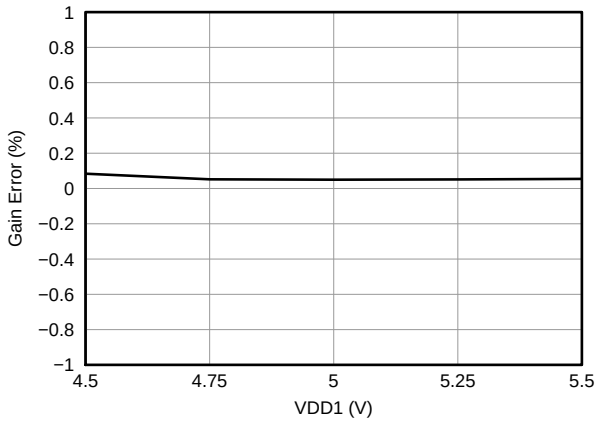

Figure 8. Gain Error vs High-Side Supply Voltage

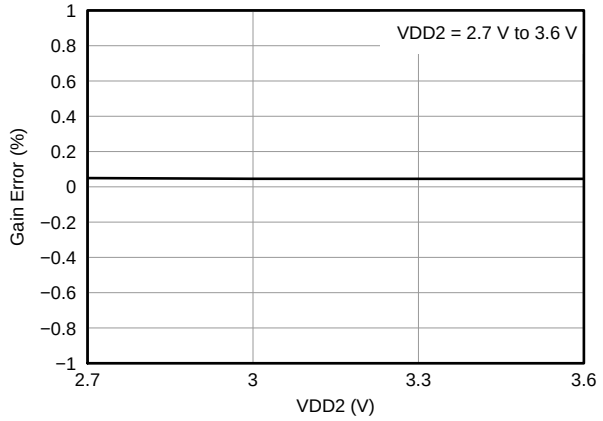

Figure 9. Gain Error vs Low-Side Supply Voltage

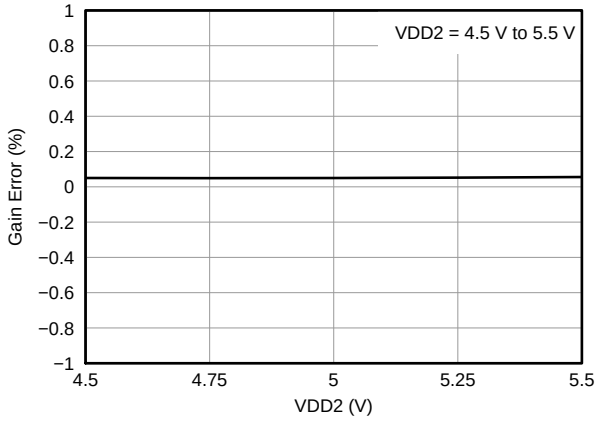

Figure 10. Gain Error vs Low-Side Supply Voltage

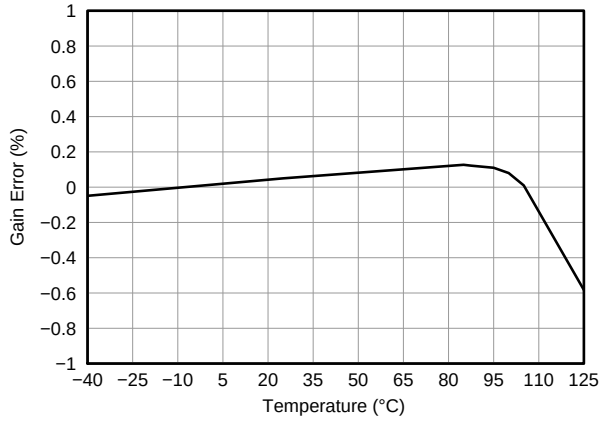

Figure 11. Gain Error vs Temperature

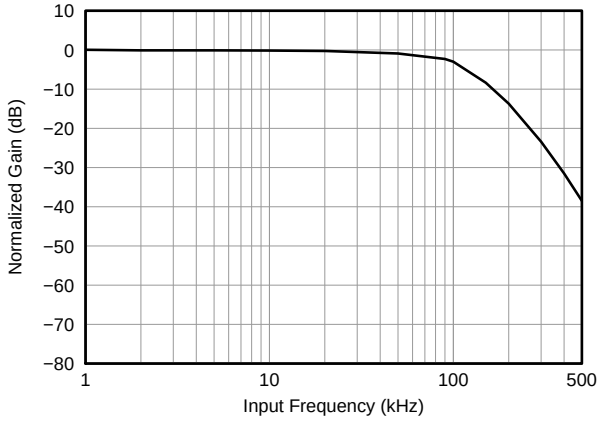

Figure 12. Normalized Gain vs Input Frequency

Typical Characteristics (continued)

At VDD1 = VDD2 = 5 V, VINP = –250 mV to 250 mV, and VINN = 0 V, unless otherwise noted.

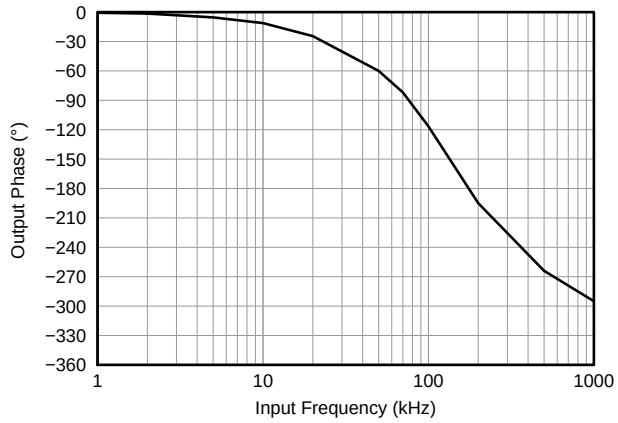

Figure 13. Output Phase vs Input Frequency

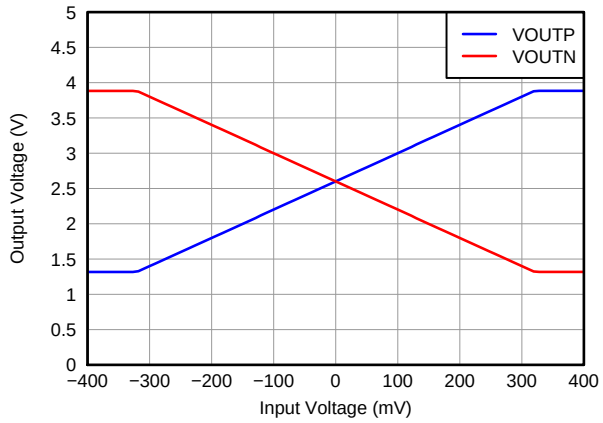

Figure 14. Output Voltage vs Input Voltage

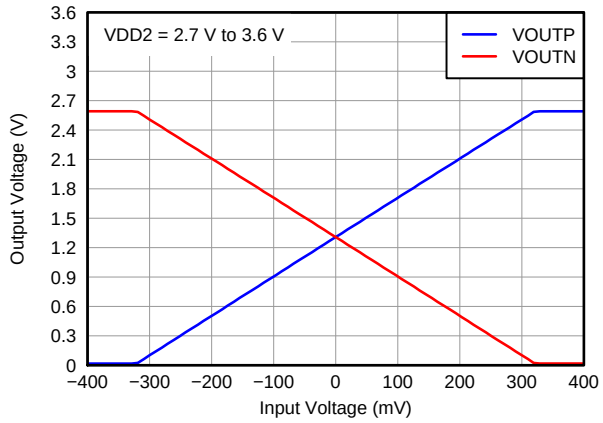

Figure 15. Output Voltage vs Input Voltage

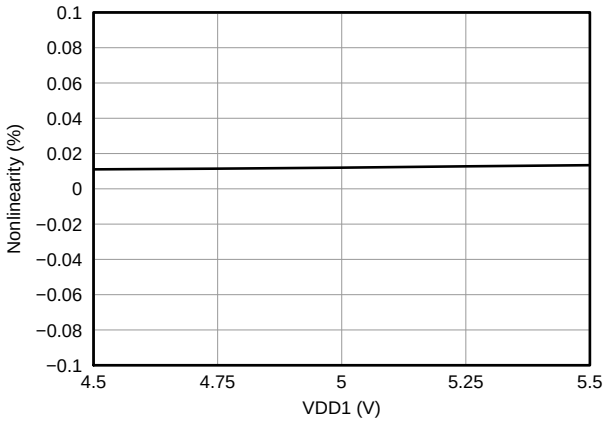

Figure 16. Nonlinearity vs High-Side Supply Voltage

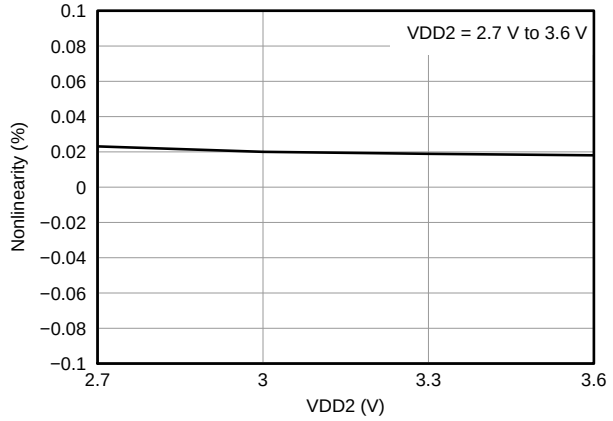

Figure 17. Nonlinearity vs Low-Side Supply Voltage

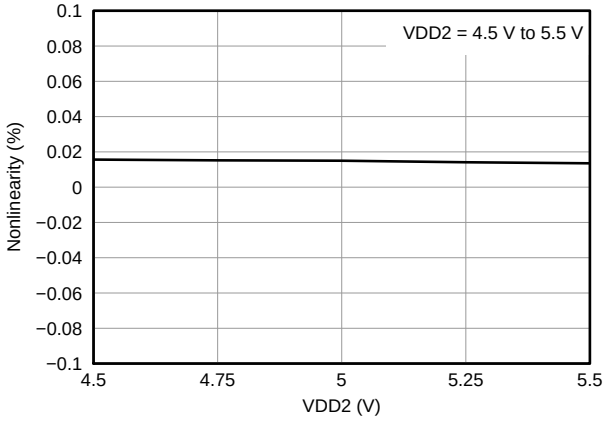

Figure 18. Nonlinearity vs Low-Side Supply Voltage

Copyright © 2011–2015, Texas Instruments Incorporated

Typical Characteristics (continued)

At VDD1 = VDD2 = 5 V, VINP = –250 mV to 250 mV, and VINN = 0 V, unless otherwise noted.

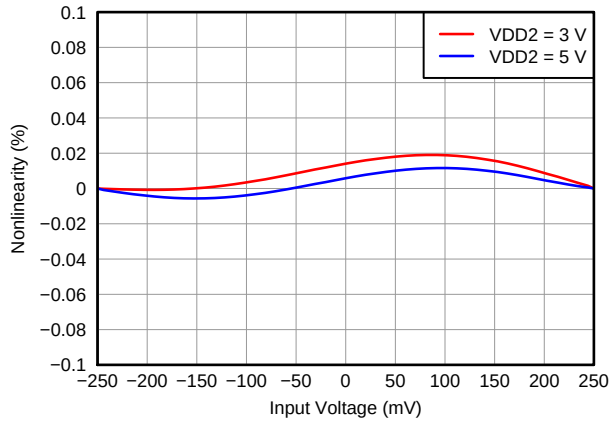

Figure 19. Nonlinearity vs Input Voltage

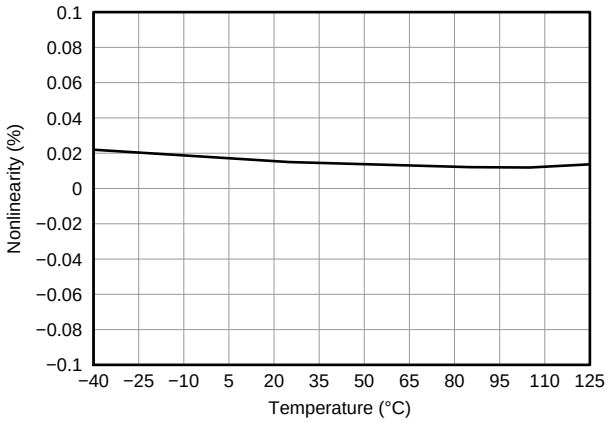

Figure 20. Nonlinearity vs Temperature

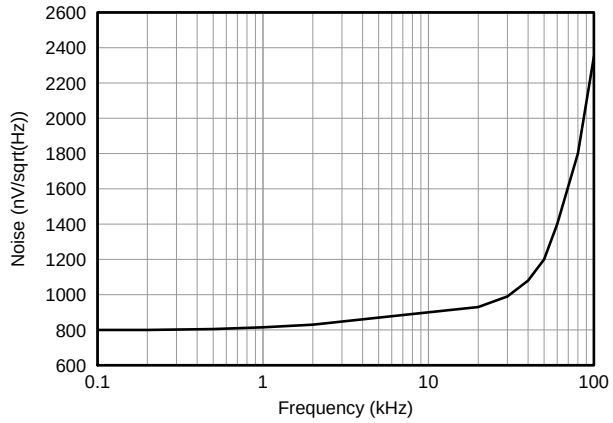

Figure 21. Output Noise Density vs Frequency

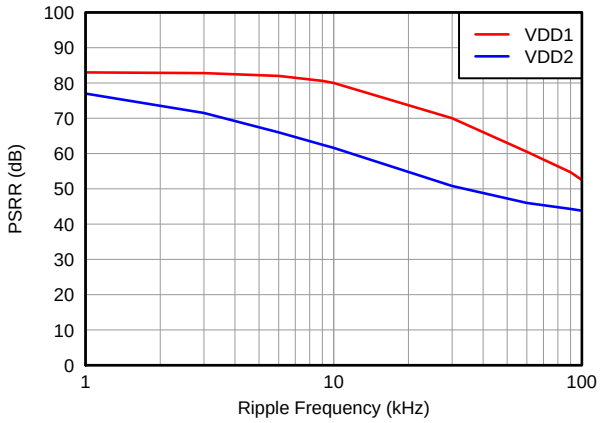

Figure 22. Power-Supply Rejection Ratio vs Ripple Frequency

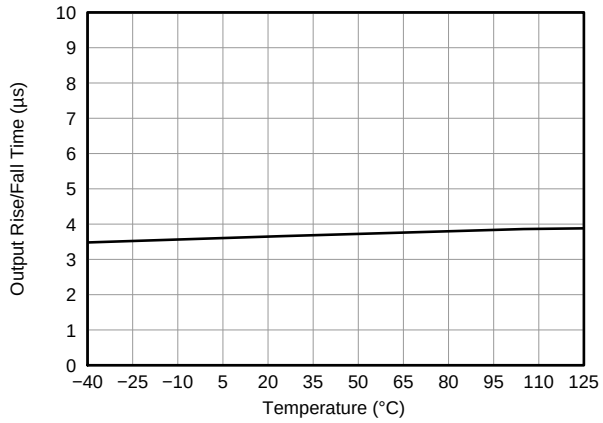

Figure 23. Output Rise and Fall Time vs Temperature

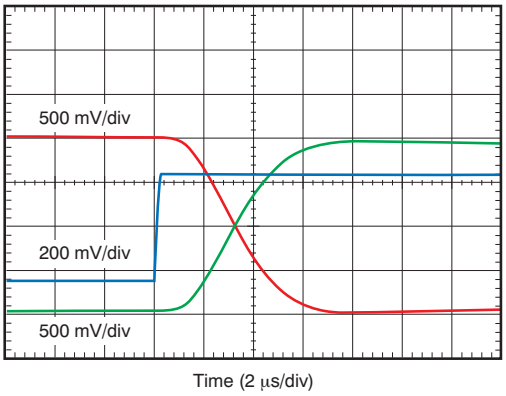

Figure 24. Full-Scale Step Response

Typical Characteristics (continued)

At VDD1 = VDD2 = 5 V, VINP = –250 mV to 250 mV, and VINN = 0 V, unless otherwise noted.

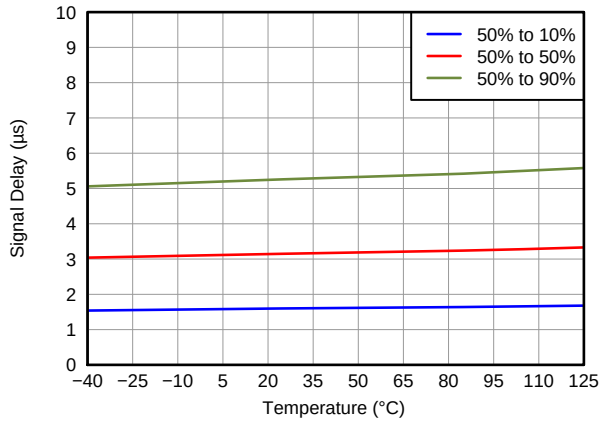

Figure 25. Output Signal Delay Time vs Temperature

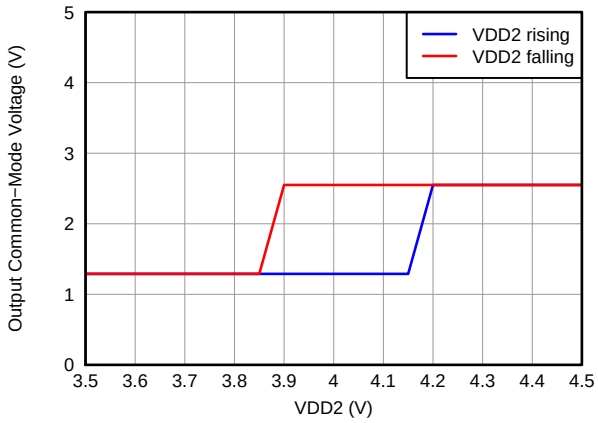

Figure 26. Output Common Mode Voltage vs Low-Side Supply Voltage

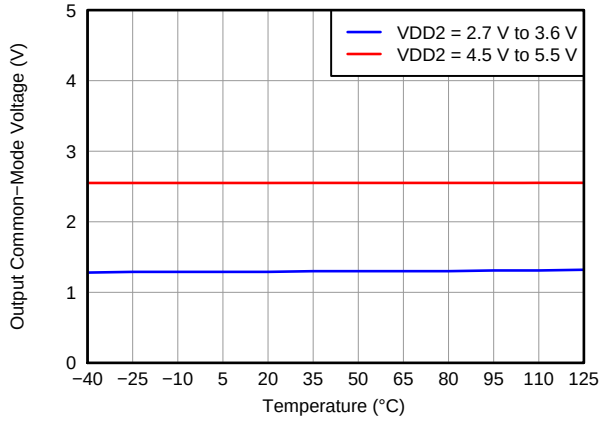

Figure 27. Output Common Mode Voltage vs Temperature

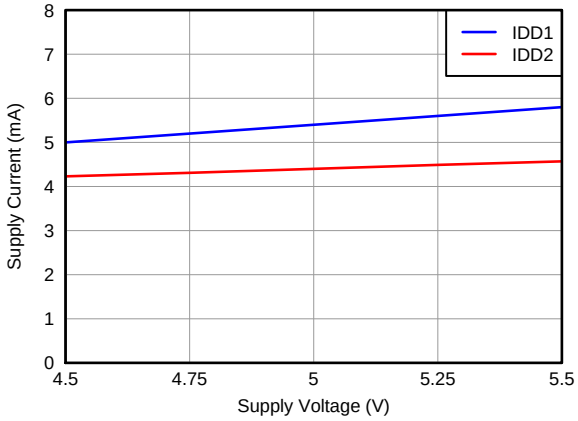

Figure 28. Supply Current vs Supply Voltage

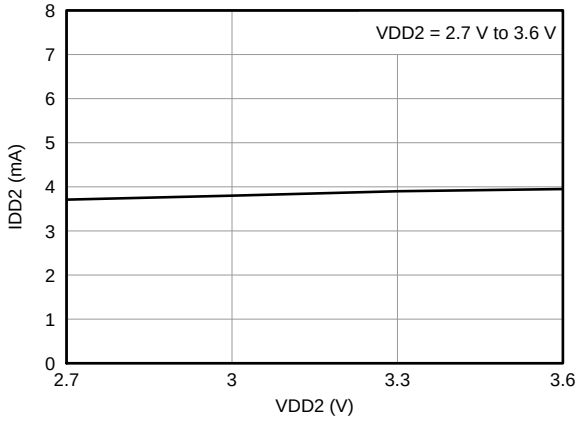

Figure 29. Low-Side Supply Current vs Low-Side Supply Voltage

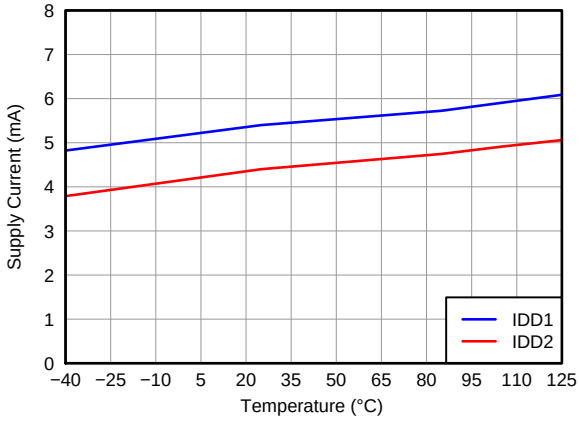

Figure 30. Supply Current vs Temperature

Copyright © 2011–2015, Texas Instruments Incorporated

7 Detailed Description

7.1 Overview

The AMC1200 is a fully-differential precision isolation amplifier. The analog input signal is converted to a digital signal and then transferred across a capacitive isolation barrier. The digital modulation used in the AMC1200 together with the isolation barrier characteristics result in excellent reliability and transient immunity.

After processing the digital signal with a low-pass filter, an analog signal is provided at the outputs. The main building blocks are shown in the *Functional Block Diagram* section.

The SiO_2-based capacitive isolation barrier supports a high level of magnetic field immunity, as described in application report, *ISO72x Digital Isolator Magnetic-Field Immunity* (SLLA181), available for download at www.ti.com.

7.2 Functional Block Diagram

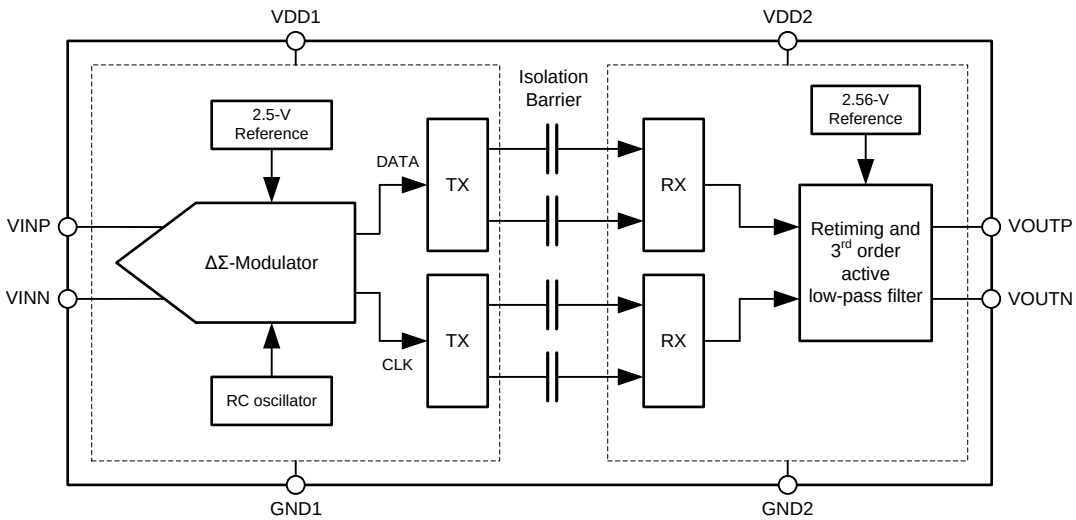

7.3 Feature Description

7.3.1 Insulation Characteristics

PARAMETER		TEST CONDITIONS		MIN	TYP	MAX	UNIT
V_{IORM}	Maximum working insulation voltage					1200	V_{PEAK}
V_{PR}	Input to output test voltage	Qualification test: after Input/Output Safety Test Subgroup 2/3 $V_{PR} = V_{IORM} \times 1.2$, t = 10 s, partial discharge < 5 pC				1140	V_{PEAK}
		Qualification test: method a, after environmental tests subgroup 1, $V_{PR} = V_{IORM} \times 1.6$, t = 10 s, partial discharge < 5 pC				1920	V_{PEAK}
		100% production test: method b1, $V_{PR} = V_{IORM}$ x 1.875, t = 1 s, partial discharge < 5 pC				2250	V_{PEAK}
V_{IOTM}	Transient overvoltage	Qualification test: t = 60 s	AMC1200			4000	V_{PEAK}
			AMC1200B			4250	V_{PEAK}
V_{ISO}	Insulation voltage per UL	Qualification test: $V_{TEST} = V_{ISO}$, t = 60 s	AMC1200			4000	V_{PEAK}
			AMC1200B			4250	V_{PEAK}
		100% production test: V_{TEST} = 1.2 x V_{ISO}, t = 1 s	AMC1200			4800	V_{PEAK}
			AMC1200B			5100	V_{PEAK}
R_S	Insulation resistance	V_{IO} = 500 V at T_S			> 10^9		Ω

Feature Description (continued)

PARAMETER		TEST CONDITIONS	MIN	TYP	MAX	UNIT
PD	Pollution degree			2		°

7.3.2 IEC 61000-4-5 Ratings

PARAMETER		TEST CONDITIONS	VALUE	UNIT
V_{IOSM}	Surge immunity	1.2-µs/50-µs voltage surge and 8-µs/20-µs current surge	±6000	V

7.3.3 IEC 60664-1 Ratings(1)

PARAMETER	TEST CONDITIONS	SPECIFICATION
Basic isolation group	Material group	II
Installation classification	Rated mains voltage ≤ 150 V_{RMS}	I-IV
	Rated mains voltage ≤ 300 V_{RMS}	I-IV
	Rated mains voltage ≤ 400 V_{RMS}	I-III
	Rated mains voltage < 600 V_{RMS}	I-III

(1) Over operating free-air temperature range (unless otherwise noted).

7.3.4 Package Characteristics(1)

PARAMETER		TEST CONDITIONS		MIN	TYP	MAX	UNIT
L(I01)	Minimum air gap (clearance)	Shortest terminal to terminal distance through air	DWV package	8			mm
			DUB package	7			mm
L(I02)	Minimum external tracking (creepage)	Shortest terminal to terminal distance across the package surface	DWV package	8			mm
			DUB package	7			mm
CTI	Tracking resistance (comparative tracking index)	DIN IEC 60112/VDE 0303 part 1		≥ 400			V
	Minimum internal gap (internal clearance)	Distance through the insulation		0.014			mm
R_{IO}	Isolation resistance	Input to output, V_{IO} = 500 V, all pins on each side of the barrier tied together to create a two-terminal device, T_A < 85°C			> 10^{12}		Ω
		Input to output, V_{IO} = 500 V, 85°C ≤ T_A < T_A max			> 10^{11}		Ω
C_{IO}	Barrier capacitance input to output	V_I = 0.5 V_{PP} at 1 MHz			1.2		pF
C_I	Input capacitance to ground	V_I = 0.5 V_{PP} at 1 MHz			3		pF

(1) Creepage and clearance requirements should be applied according to the specific equipment isolation standards of a specific application. Take care to maintain the creepage and clearance distance of the board design to ensure that the mounting pads of the isolator on the printed-circuit-board (PCB) do not reduce this distance. Creepage and clearance on a PCB become equal according to the measurement techniques shown in the TI Isolation Glossary. Techniques such as inserting grooves and/or ribs on the PCB are used to help increase these specifications.

7.3.5 IEC Safety Limiting Values

Safety limiting intends to prevent potential damage to the isolation barrier upon failure of input or output (I/O) circuitry. A failure of the I/O circuitry can allow low resistance to ground or the supply and, without current limiting, dissipate sufficient power to overheat the die and damage the isolation barrier, potentially leading to secondary system failures.

PARAMETER		TEST CONDITIONS	MIN	TYP	MAX	UNIT
I_S	Safety input, output, or supply current	θ_{JA} = 246°C/W, V_{IN} = 5.5 V, T_J = 150°C, T_A = 25°C			10	mA
T_C	Maximum case temperature				150	°C

Copyright © 2011–2015, Texas Instruments Incorporated

The safety-limiting constraint is the operating virtual junction temperature range specified in the *Absolute Maximum Ratings* table. The power dissipation and junction-to-air thermal impedance of the device installed in the application hardware determine the junction temperature. The assumed junction-to-air thermal resistance in the *Thermal Information* table is that of a device installed in the JESD51-3, *Low Effective Thermal Conductivity Test Board for Leaded Surface Mount Packages* and is conservative. The power is the recommended maximum input voltage times the current. The junction temperature is then the ambient temperature plus the power times the junction-to-air thermal resistance.

7.3.6 Regulatory Information

VDE/IEC	UL
Certified according to VDE V 0884-10	Recognized under 1577 component recognition program
Certificate number: 40016131	File number: E181974

7.3.7 Isolation Amplifier

The AMC1200 device consists of a second order delta-sigma modulator input stage including an internal reference and clock generator. The output of the modulator and clock signal are differentially transmitted over the integrated capacitive isolation barrier that separates the high- and low-voltage domains. The received bitstream and clock signals are synchronized and processed by a third-order analog filter with a nominal gain of 8 on the low-side and presented as a differential output of the device, as shown in *Functional Block Diagram* section.

7.3.8 Analog Input

The analog input range is tailored to directly accommodate a voltage drop across a shunt resistor used for current sensing. However, there are two restrictions on the analog input signals, VINP and VINN. If the input voltage exceeds the range AGND – 0.5 V to AVDD + 0.5 V, the input current must be limited to 10 mA to prevent the implemented input protection diodes from damage. In addition, the linearity and the noise performance of the device are ensured only when the differential analog input voltage remains within ±250 mV.

The differential analog input of the AMC1200 and AMC1200B devices is a switched-capacitor circuit based on a second-order modulator stage that digitizes the input signal into a 1-bit output stream. These devices compare the differential input signal (V_{IN} = VINP – VINN) against the internal reference of 2.5 V using internal capacitors that are continuously charged and discharged with a typical frequency of 10 MHz. With the S1 switches closed, C_{IND} charges to the voltage difference across VINP and VINN. For the discharge phase, both S1 switches open first and then both S2 switches close. C_{IND} discharges to approximately AGND + 0.8 V during this phase. Figure 31 shows the simplified equivalent input circuitry.

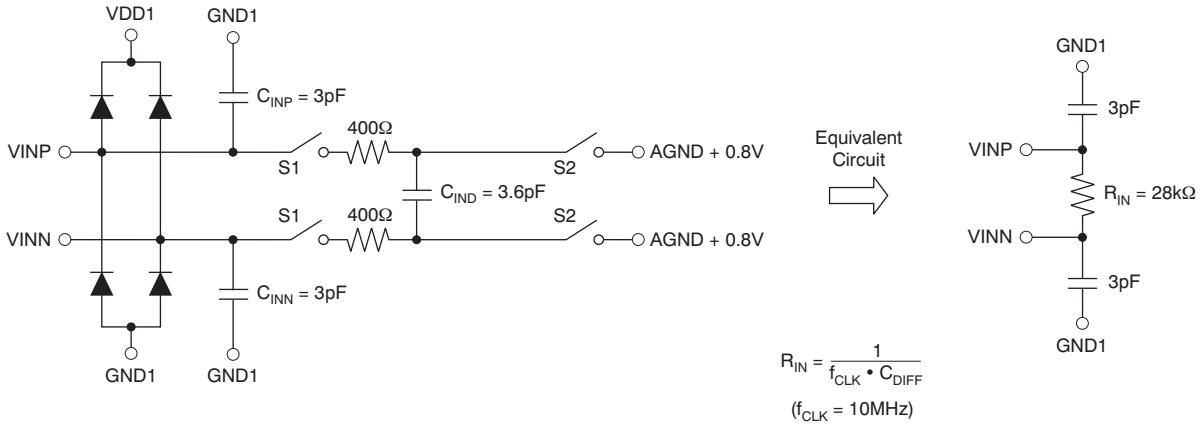

Figure 31. Equivalent Input Circuit

7.4 Device Functional Modes

The AMC1200 is operational when the power supplies VDD1 and VDD2 are applied as specified in the *Recommended Operating Conditions* section.

Device Functional Modes (continued)

The AMC1200 does not have any additional functional modes.

Copyright © 2011–2015, Texas Instruments Incorporated

8 Application and Implementation

NOTE

Information in the following applications sections is not part of the TI component specification, and TI does not warrant its accuracy or completeness. TI's customers are responsible for determining suitability of components for their purposes. Customers should validate and test their design implementation to confirm system functionality.

8.1 Application Information

The AMC1200 and AMC1200B devices offer unique linearity, high input common mode rejection, low DC errors and low temperature drift. These features make the AMC1200 a robust, high-performance isolation amplifier for industrial applications where high voltage isolation is required.

8.2 Typical Applications

8.2.1 Motor Control

Figure 32 shows a typical operation of the AMC1200 and AMC1200B devices in a motor-control application. Measurement of the motor phase current is done through the shunt resistor, R_{SHUNT} (in this case, a two-terminal shunt).

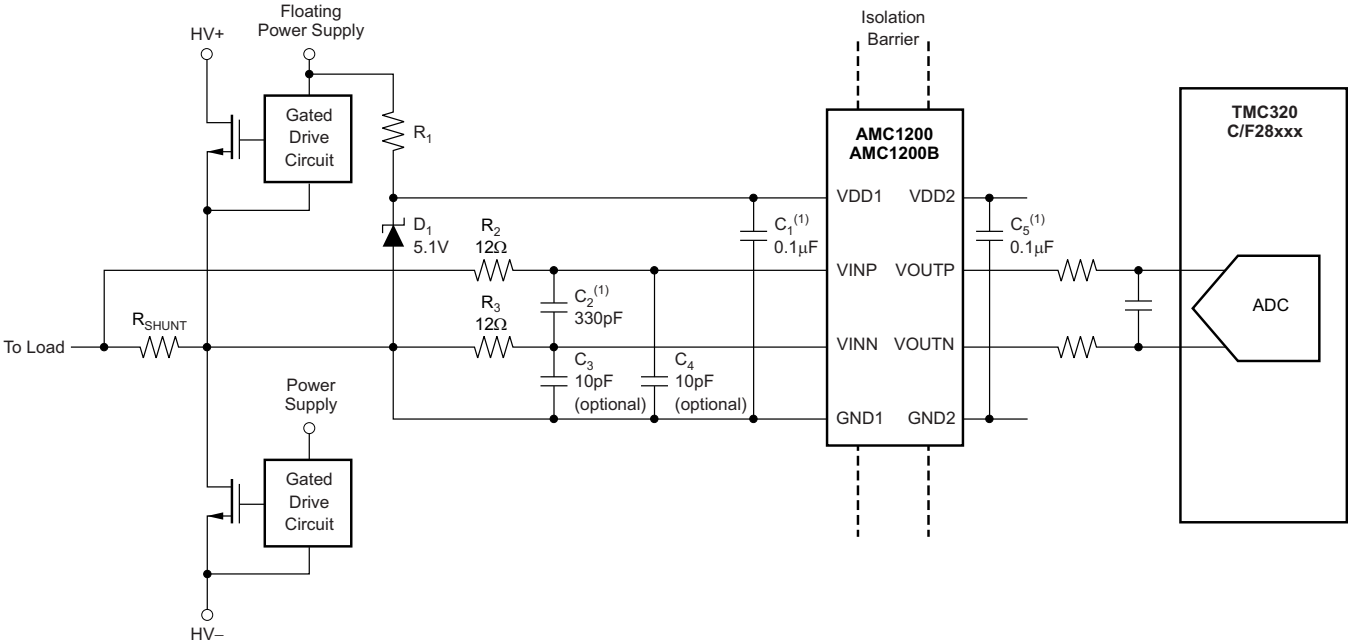

(1) Place these capacitors as close as possible to the AMC device.

Figure 32. Typical Application Diagram

The high-side power supply (VDD1) for the AMC1200 and AMC1200B are derived from the power supply of the upper gate driver. Further details are provided in the *Power Supply Recommendations* section.

The high transient immunity of the AMC1200 and AMC1200B ensures reliable and accurate operation even in high-noise environments such as the power stages of the motor drives.

As shown in Figure 37, TI recommends placing the bypass and filter capacitors as close as possible to the AMC device to ensure best performance.

Typical Applications (continued)

8.2.1.1 Design Requirements

For better performance, the differential input signal is filtered using RC filters (components R_2, R_3, and C_2). Optionally, C_3 and C_4 can be used to reduce charge dumping from the inputs. In this case, take care when choosing the quality of these capacitors; mismatch in values of these capacitors leads to a common mode error at the modulator input. If implemented, TI recommends using NP0 capacitors for C_2, C_3 and C_4.

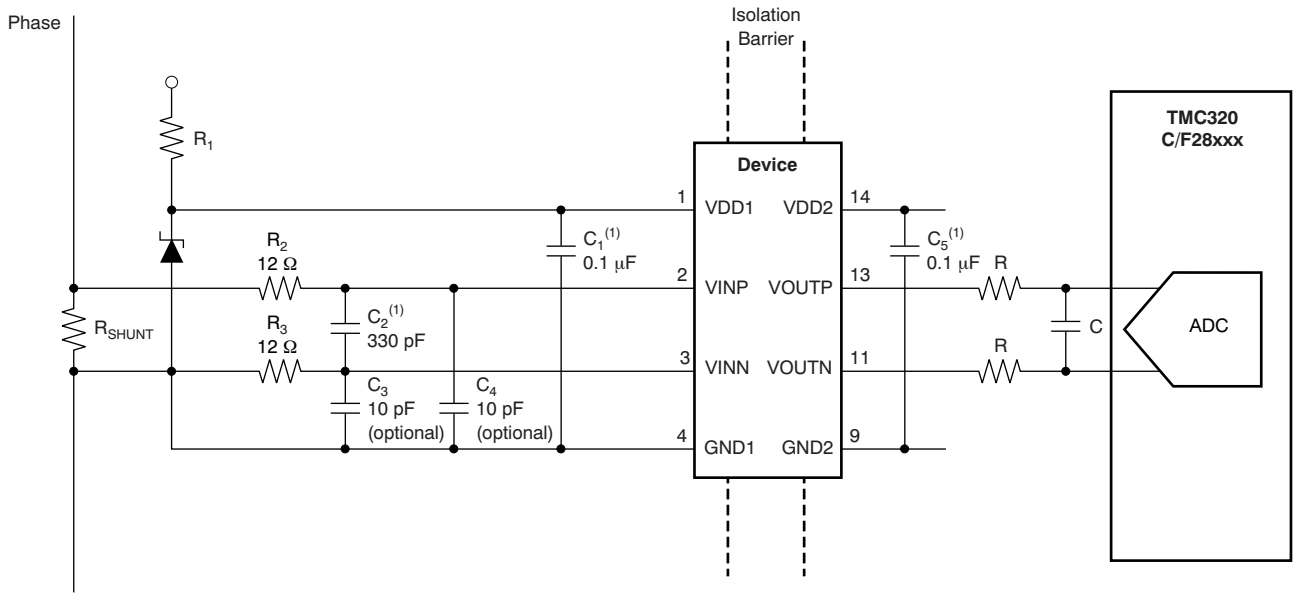

Figure 33. Shunt-Based Current Sensing with the AMC1200

Similar to the current measurements, isolated voltage measurements can be performed as described in the .

8.2.1.2 Detailed Design Procedure

The floating ground reference (GND1) is derived from the end of the shunt resistor, which is connected to the negative input of the AMC1200 (VINN). If a four-terminal shunt is used, the inputs of the AMC1200 are connected to the inner leads and GND1 is connected to one of the outer shunt leads. The differential input of the AMC1200 ensures accurate operation even in noisy environments.

TI recommends limiting the value of resistors R_2 and R_3 to less than 24 Ω to avoid the incomplete settling of the AMC1200 input circuitry. The section provides more details on the AMC1200 input circuitry.

The differential output of the AMC1200 can either directly drive an analog-to-digital converter (ADC) input or can be further filtered before being processed by the ADC. For more information on the general procedure to design the filtering and driving stages for SAR ADCs, consult the TI Precision Designs *18 bit, 1Msps Data Acquisition Block Optimized for Lowest Distortion and Noise* (SLAU515), and *18 bit Data Acquisition Block Optimized for Lowest Power* (SLAU513) available for download at www.ti.com

Copyright © 2011–2015, Texas Instruments Incorporated

Typical Applications (continued)

8.2.1.3 Application Curve

In frequency inverter applications the power switches must be protected in case of an overcurrent condition. To allow fast powering off of the system, low delay caused by the isolation amplifier is required. Figure 34 shows the typical full-scale step response of the AMC1200.

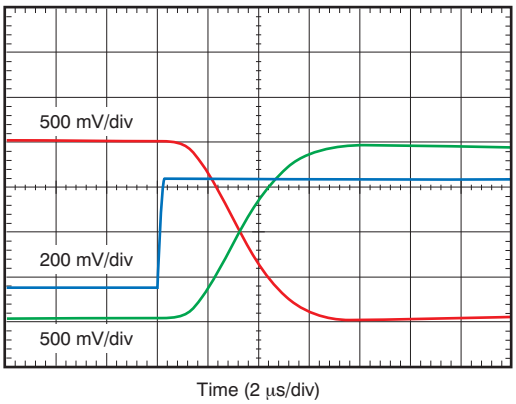

Figure 34. Typical Step Response of the AMC1200

8.2.2 Isolated Voltage Measurement

The AMC1200 and AMC1200B can also be used for isolated voltage measurement applications, as shown in a simplified way in Figure 35. In such applications, usually a resistor divider (R_1 and R_2 in Figure 35) is used to match the relatively small input voltage range of the AMC device. R_2 and the input resistance R_{IN} of the AMC1200 also create a resistance divider that results in additional gain error. With the assumption that R_1 and R_{IN} have a considerably higher value than R_2, the resulting total gain error can be estimated using Equation 1:

$$G_{ERRTOT} = G_{ERR} + \frac{R_2}{R_{IN}} \quad (1)$$

where

- G_{ERR} = the gain error of AMC device.

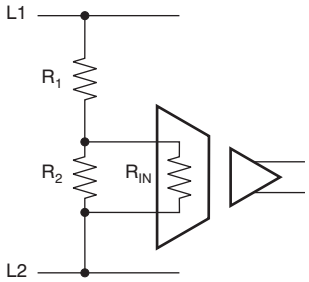

Figure 35. Voltage Measurement Application

9 Power Supply Recommendations

In a typical frequency inverter application, the high-side power supply for the AMC1200 (VDD1) is derived from the system supply, as shown in Figure 36. For lowest cost, a Zener diode can be used to limit the voltage to 5 V ± 10%. TI recommends using a 0.1-µF, low-ESR decoupling capacitor for filtering this power-supply. TI also recommends using a 0.1-µF decoupling capacitor for filtering the power-supply on the VDD2 side. For best performance, place these capacitors (C_1 and C_4) as close as possible to the VDD1 and VDD2 pins respectively. If better filtering is required, an additional 1-µF to 10-µF capacitor can be used in parallel to C_1 and C_4.

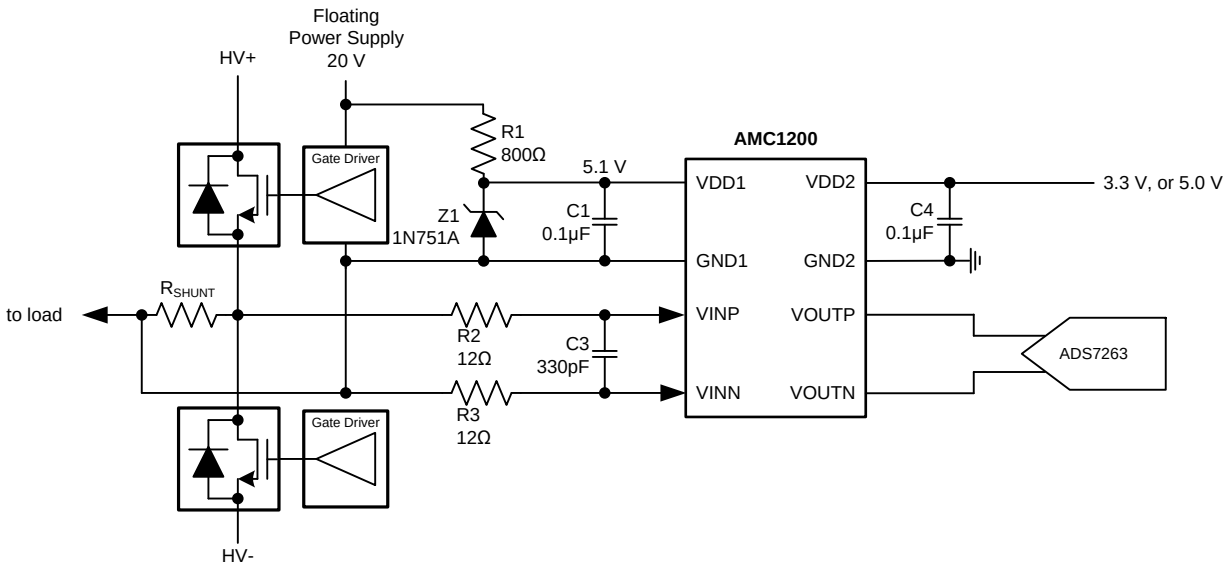

Figure 36. Zener Diode Based High-Side Supply

For higher power efficiency and better performance, a buck converter can be used; an example of such an approach is based on the LM5017. A reference design including performance test results and layout documentation can be downloaded at PMP9480, *Isolated Bias Supplies + Isolated Amplifier Combo for Line Voltage or Current Measurement*.

10 Layout

10.1 Layout Guidelines

A layout recommendation showing the critical placement of the decoupling capacitors that be placed as close as possible to the AMC1200 while maintaining a differential routing of the input signals is shown in Figure 37.

To maintain the isolation barrier and the high CMTI of the device, the distance between the high-side ground (GND1) and the low-side ground (GND2) should be kept at maximum; that is, the entire area underneath the device should be kept free of any conducting materials.

Copyright © 2011–2015, Texas Instruments Incorporated

10.2 Layout Example

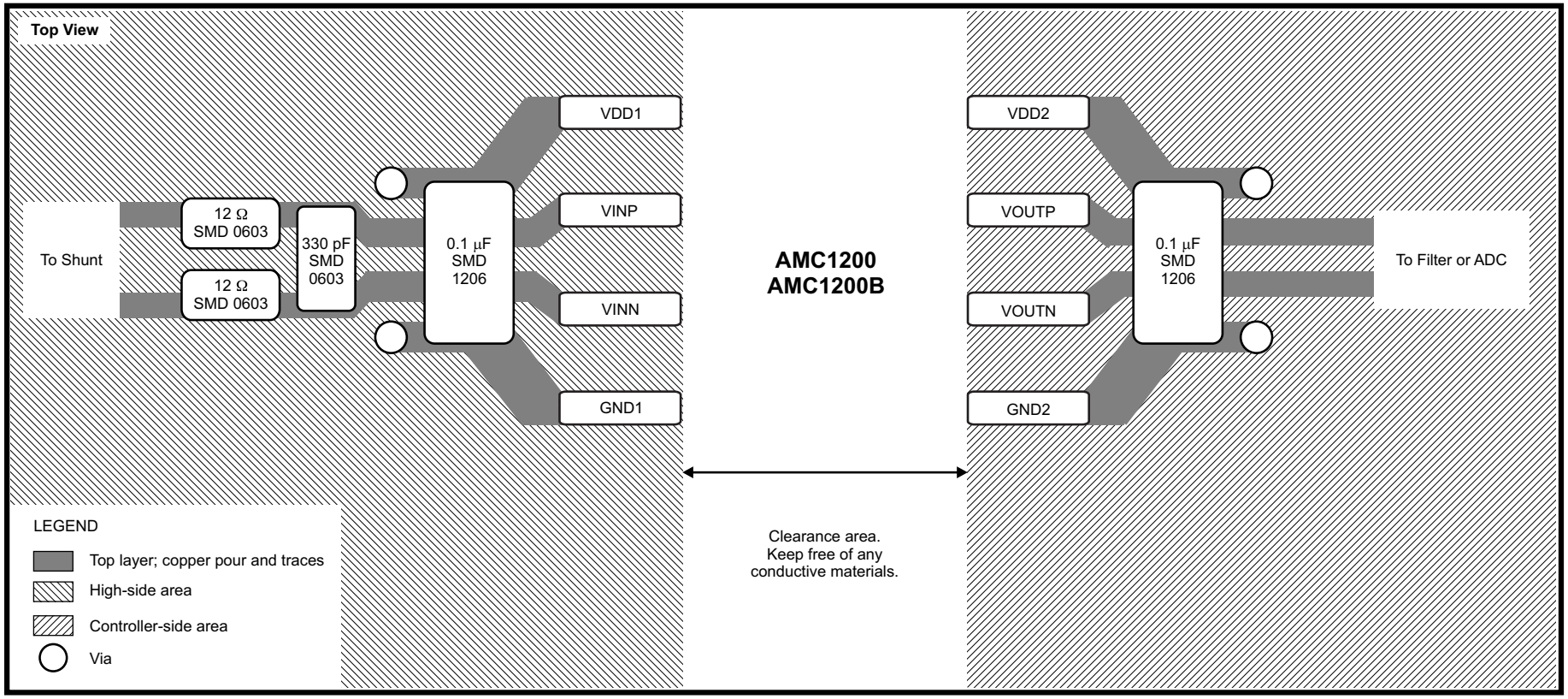

Figure 37. Layout Recommendation

11 Device and Documentation Support

11.1 Documentation Support

11.1.1 Related Documentation

For related documentation see the following:

- *TI Isolation Glossary*, SLLA353
- *18 bit, 1Msps Data Acquisition Block Optimized for Lowest Distortion and Noise*, SLAU515
- *18 bit Data Acquisition Block Optimized for Lowest Power*, SLAU513
- *High-Voltage Lifetime of the ISO72x Family of Digital Isolators*, SLLA197
- *ISO72x Digital Isolator Magnetic-Field Immunity*, SLLA181
- *AMC1100: Replacement of Input Main Sensing Transformer in Inverters with Isolate Amplifier*, SLAA552
- *Isolated Current Sensing Reference Design Solution, 5A, 2kV*, TIPD121
- *Isolated Bias Supplies + Isolated Amplifier Combo for Line Voltage or Current Measurement*, PMP9480
- TPS62120 Data Sheet, SLVSAD5
- MSP430F471xx Data Sheet, SLAS626
- SN6501 Data Sheet, SLLSEA0
- LM5017 Data Sheet, SNVS783

11.2 Related Links

The following table lists quick access links. Categories include technical documents, support and community resources, tools and software, and quick access to sample or buy.

Table 1. Related Links

PARTS	PRODUCT FOLDER	SAMPLE & BUY	TECHNICAL DOCUMENTS	TOOLS & SOFTWARE	SUPPORT & COMMUNITY
AMC1200	Click here	Click here	Click here	Click here	Click here
AMC1200B	Click here	Click here	Click here	Click here	Click here

11.3 Community Resources

The following links connect to TI community resources. Linked contents are provided "AS IS" by the respective contributors. They do not constitute TI specifications and do not necessarily reflect TI's views; see TI's Terms of Use.

TI E2E™ Online Community ***TI's Engineer-to-Engineer (E2E) Community.*** Created to foster collaboration among engineers. At e2e.ti.com, you can ask questions, share knowledge, explore ideas and help solve problems with fellow engineers.

Design Support ***TI's Design Support*** Quickly find helpful E2E forums along with design support tools and contact information for technical support.

11.4 Trademarks

E2E is a trademark of Texas Instruments.
All other trademarks are the property of their respective owners.

11.5 Electrostatic Discharge Caution

This integrated circuit can be damaged by ESD. Texas Instruments recommends that all integrated circuits be handled with appropriate precautions. Failure to observe proper handling and installation procedures can cause damage.

ESD damage can range from subtle performance degradation to complete device failure. Precision integrated circuits may be more susceptible to damage because very small parametric changes could cause the device not to meet its published specifications.

11.6 Glossary

SLYZ022 — *TI Glossary*.

This glossary lists and explains terms, acronyms, and definitions.

Copyright © 2011–2015, Texas Instruments Incorporated

12 Mechanical, Packaging, and Orderable Information

The following pages include mechanical, packaging, and orderable information. This information is the most current data available for the designated devices. This data is subject to change without notice and revision of this document. For browser-based versions of this data sheet, refer to the left-hand navigation.

PACKAGING INFORMATION

Orderable Device	Status (1)	Package Type	Package Drawing	Pins	Package Qty	Eco Plan (2)	Lead finish/ Ball material (6)	MSL Peak Temp (3)	Op Temp (°C)	Device Marking (4/5)	Samples
AMC1200BDUB	ACTIVE	SOP	DUB	8	50	RoHS & Green	NIPDAU	Level-4-260C-72 HR	-40 to 105	1200B	Samples
AMC1200BDUBR	ACTIVE	SOP	DUB	8	350	RoHS & Green	NIPDAU	Level-3-260C-168 HR	-40 to 105	1200B	Samples
AMC1200BDWV	ACTIVE	SOIC	DWV	8	64	RoHS & Green	NIPDAU	Level-2-260C-1 YEAR	-40 to 105	AMC1200B	Samples
AMC1200BDWVR	ACTIVE	SOIC	DWV	8	1000	RoHS & Green	NIPDAU	Level-2-260C-1 YEAR	-40 to 105	AMC1200B	Samples
AMC1200SDUB	ACTIVE	SOP	DUB	8	50	RoHS & Green	NIPDAU	Level-4-260C-72 HR	-40 to 105	AMC1200	Samples
AMC1200SDUBR	ACTIVE	SOP	DUB	8	350	RoHS & Green	NIPDAU	Level-3-260C-168 HR	-40 to 105	AMC1200	Samples

(1) The marketing status values are defined as follows:
ACTIVE: Product device recommended for new designs.
LIFEBUY: TI has announced that the device will be discontinued, and a lifetime-buy period is in effect.
NRND: Not recommended for new designs. Device is in production to support existing customers, but TI does not recommend using this part in a new design.
PREVIEW: Device has been announced but is not in production. Samples may or may not be available.
OBSOLETE: TI has discontinued the production of the device.

(2) **RoHS:** TI defines "RoHS" to mean semiconductor products that are compliant with the current EU RoHS requirements for all 10 RoHS substances, including the requirement that RoHS substance do not exceed 0.1% by weight in homogeneous materials. Where designed to be soldered at high temperatures, "RoHS" products are suitable for use in specified lead-free processes. TI may reference these types of products as "Pb-Free".
RoHS Exempt: TI defines "RoHS Exempt" to mean products that contain lead but are compliant with EU RoHS pursuant to a specific EU RoHS exemption.
Green: TI defines "Green" to mean the content of Chlorine (Cl) and Bromine (Br) based flame retardants meet JS709B low halogen requirements of <=1000ppm threshold. Antimony trioxide based flame retardants must also meet the <=1000ppm threshold requirement.

(3) MSL, Peak Temp. - The Moisture Sensitivity Level rating according to the JEDEC industry standard classifications, and peak solder temperature.

(4) There may be additional marking, which relates to the logo, the lot trace code information, or the environmental category on the device.

(5) Multiple Device Markings will be inside parentheses. Only one Device Marking contained in parentheses and separated by a "~" will appear on a device. If a line is indented then it is a continuation of the previous line and the two combined represent the entire Device Marking for that device.

(6) Lead finish/Ball material - Orderable Devices may have multiple material finish options. Finish options are separated by a vertical ruled line. Lead finish/Ball material values may wrap to two lines if the finish value exceeds the maximum column width.

Important Information and Disclaimer: The information provided on this page represents TI's knowledge and belief as of the date that it is provided. TI bases its knowledge and belief on information provided by third parties, and makes no representation or warranty as to the accuracy of such information. Efforts are underway to better integrate information from third parties. TI has taken and continues to take reasonable steps to provide representative and accurate information but may not have conducted destructive testing or chemical analysis on incoming materials and chemicals. TI and TI suppliers consider certain information to be proprietary, and thus CAS numbers and other limited information may not be available for release.

In no event shall TI's liability arising out of such information exceed the total purchase price of the TI part(s) at issue in this document sold by TI to Customer on an annual basis.

OTHER QUALIFIED VERSIONS OF AMC1200 :

- Automotive: AMC1200-Q1

NOTE: Qualified Version Definitions:

- Automotive - Q100 devices qualified for high-reliability automotive applications targeting zero defects

TAPE AND REEL INFORMATION

REEL DIMENSIONS

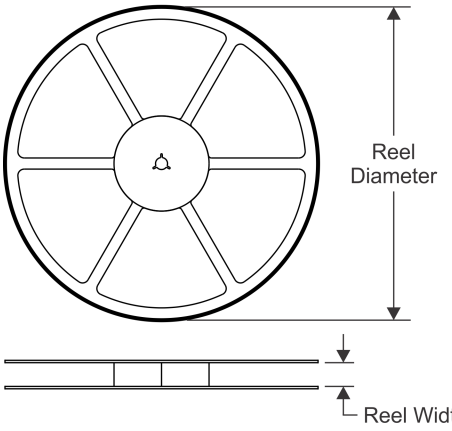

TAPE DIMENSIONS

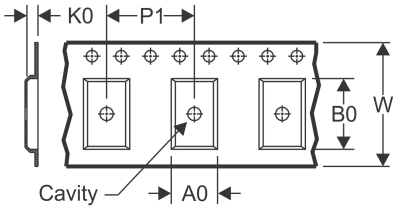

A0	Dimension designed to accommodate the component width
B0	Dimension designed to accommodate the component length
K0	Dimension designed to accommodate the component thickness
W	Overall width of the carrier tape
P1	Pitch between successive cavity centers

QUADRANT ASSIGNMENTS FOR PIN 1 ORIENTATION IN TAPE

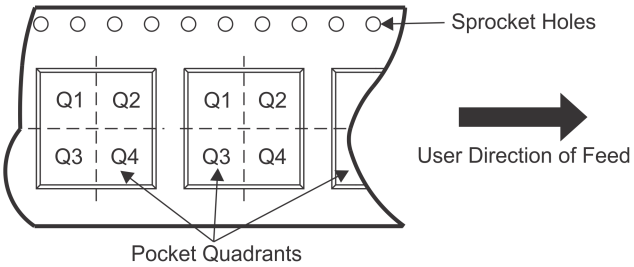

*All dimensions are nominal

Device	Package Type	Package Drawing	Pins	SPQ	Reel Diameter (mm)	Reel Width W1 (mm)	A0 (mm)	B0 (mm)	K0 (mm)	P1 (mm)	W (mm)	Pin1 Quadrant
AMC1200BDUBR	SOP	DUB	8	350	330.0	24.4	10.9	10.01	5.85	16.0	24.0	Q1
AMC1200BDUBR	SOP	DUB	8	350	330.0	24.4	13.1	9.75	6.0	16.0	24.0	Q1
AMC1200BDWVR	SOIC	DWV	8	1000	330.0	16.4	12.05	6.15	3.3	16.0	16.0	Q1
AMC1200SDUBR	SOP	DUB	8	350	330.0	24.4	10.9	10.01	5.85	16.0	24.0	Q1
AMC1200SDUBR	SOP	DUB	8	350	330.0	24.4	13.1	9.75	6.0	16.0	24.0	Q1

TAPE AND REEL BOX DIMENSIONS

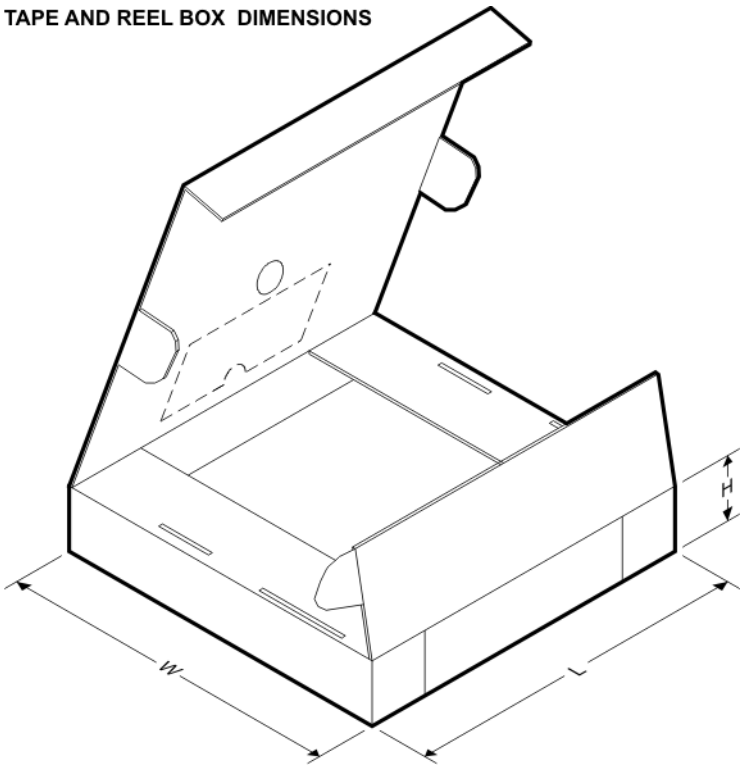

*All dimensions are nominal

Device	Package Type	Package Drawing	Pins	SPQ	Length (mm)	Width (mm)	Height (mm)
AMC1200BDUBR	SOP	DUB	8	350	346.0	346.0	29.0
AMC1200BDUBR	SOP	DUB	8	350	367.0	367.0	45.0
AMC1200BDWVR	SOIC	DWV	8	1000	350.0	350.0	43.0
AMC1200SDUBR	SOP	DUB	8	350	346.0	346.0	41.0
AMC1200SDUBR	SOP	DUB	8	350	367.0	367.0	45.0

TUBE

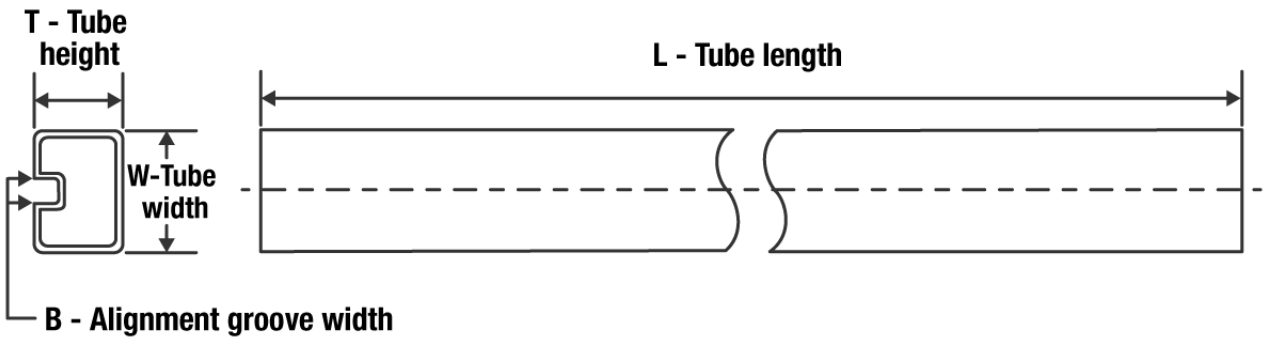

*All dimensions are nominal

Device	Package Name	Package Type	Pins	SPQ	L (mm)	W (mm)	T (µm)	B (mm)
AMC1200BDUB	DUB	SOP	8	50	532.13	13.51	7.36	6.91
AMC1200BDUB	DUB	SOP	8	50	532.13	13	7300	6.6
AMC1200BDWV	DWV	SOIC	8	64	505.46	13.94	4826	6.6
AMC1200SDUB	DUB	SOP	8	50	532.13	13.51	7.36	6.91
AMC1200SDUB	DUB	SOP	8	50	532.13	13	7300	6.6

DUB 8 SOP - 4.85 mm max height

SMALL OUTLINE PACKAGE

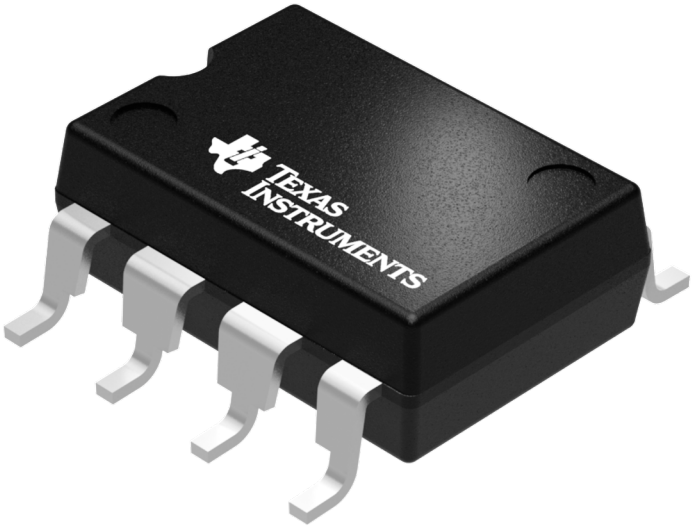

Images above are just a representation of the package family, actual package may vary.
Refer to the product data sheet for package details.

TEXAS INSTRUMENTS

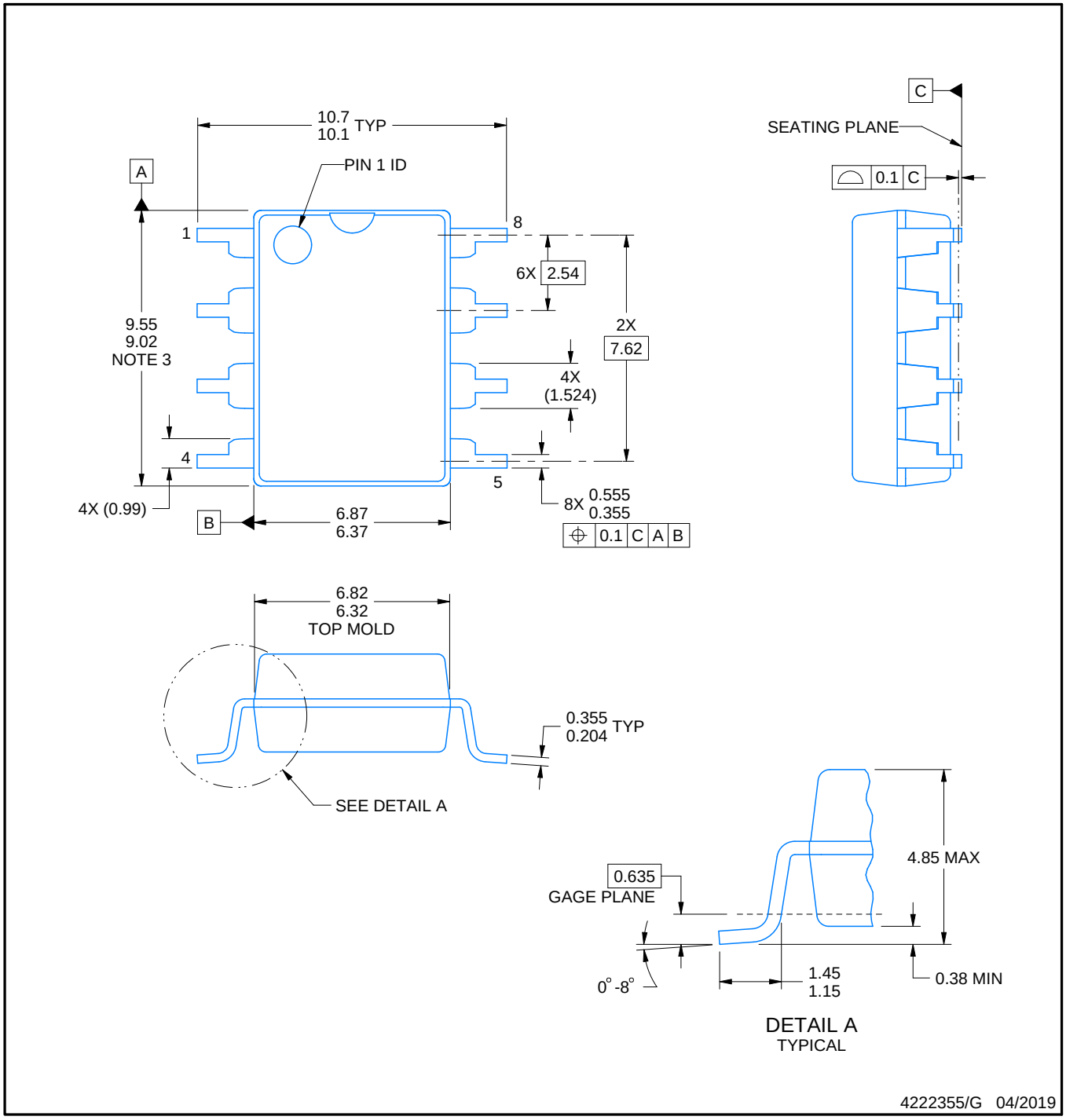

NOTES:

1. All linear dimensions are in millimeters. Any dimensions in parenthesis are for reference only. Dimensioning and tolerancing per ASME Y14.5M.
2. This drawing is subject to change without notice.
3. This dimension does not include mold flash, protrusions, or gate burrs. Mold flash, protrusions, or gate burrs shall not exceed 0.254 mm per side.

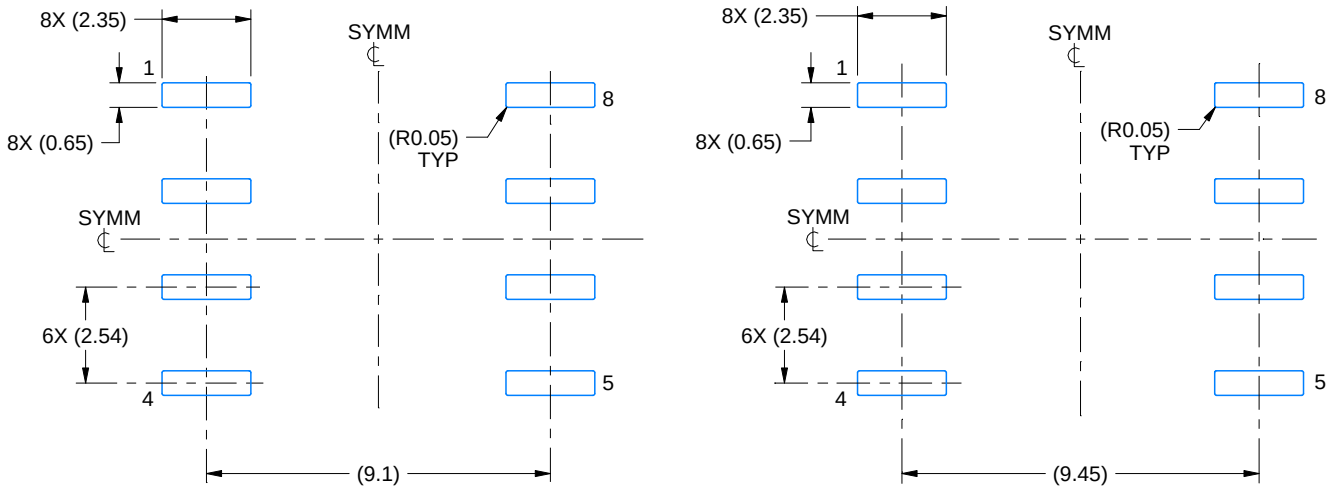

IPC-7351 NOMINAL
6.75 mm CLEARANCE/CREEPAGE

HV / ISOLATION OPTION
7.1 mm CLEARANCE/CREEPAGE

LAND PATTERN EXAMPLES
EXPOSED METAL SHOWN
SCALE:5X

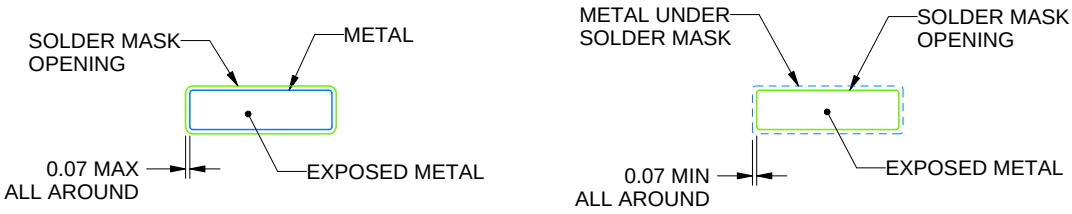

NON SOLDER MASK
DEFINED

SOLDER MASK
DEFINED

SOLDER MASK DETAILS
NOT TO SCALE

4222355/G 04/2019

NOTES: (continued)

4. Publication IPC-7351 may have alternate designs.
5. Solder mask tolerances between and around signal pads can vary based on board fabrication site.

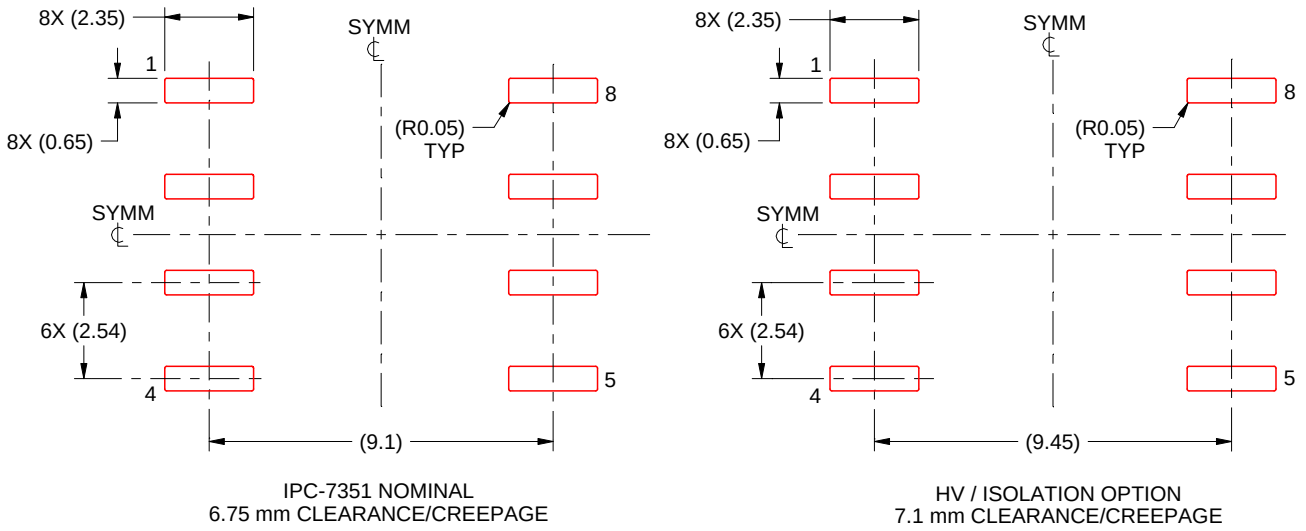

SOLDER PASTE EXAMPLE
BASED ON 0.125 mm THICK STENCIL
SCALE:5X

4222355/G 04/2019

NOTES: (continued)

6. Laser cutting apertures with trapezoidal walls and rounded corners may offer better paste release. IPC-7525 may have alternate design recommendations.
7. Board assembly site may have different recommendations for stencil design.

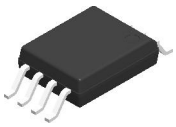

DWV0008A

SOIC - 2.8 mm max height

SOIC

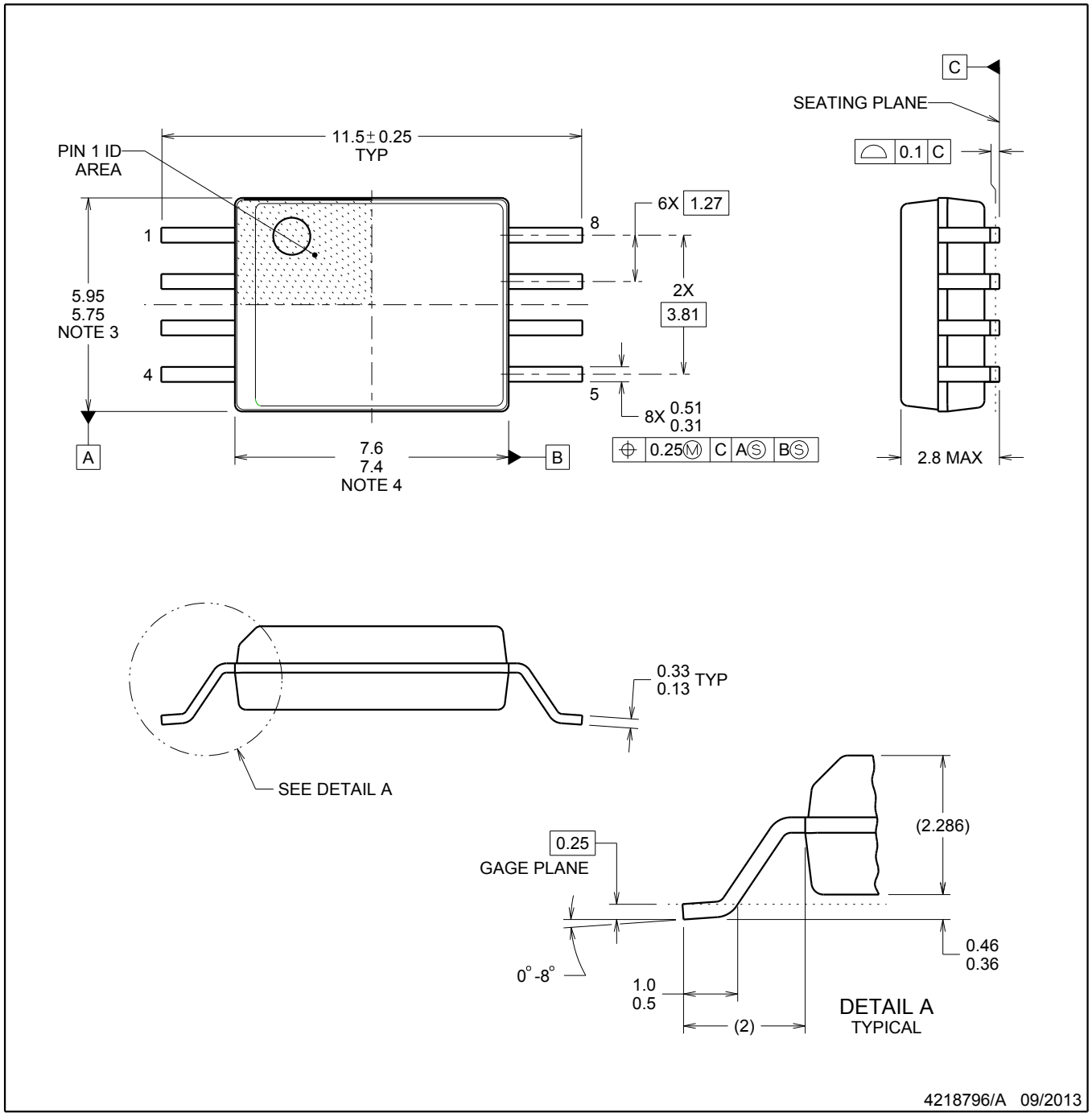

NOTES:

1. All linear dimensions are in millimeters. Dimensions in parenthesis are for reference only. Dimensioning and tolerancing per ASME Y14.5M.
2. This drawing is subject to change without notice.
3. This dimension does not include mold flash, protrusions, or gate burrs. Mold flash, protrusions, or gate burrs shall not exceed 0.15 mm, per side.
4. This dimension does not include interlead flash. Interlead flash shall not exceed 0.25 mm, per side.

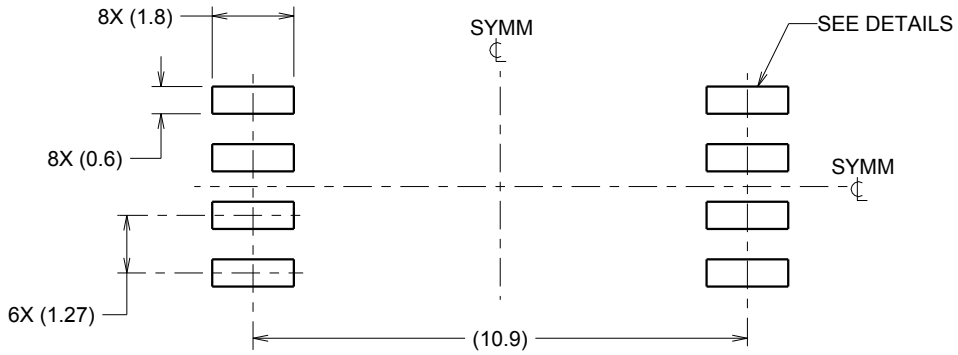

LAND PATTERN EXAMPLE
9.1 mm NOMINAL CLEARANCE/CREEPAGE
SCALE:6X

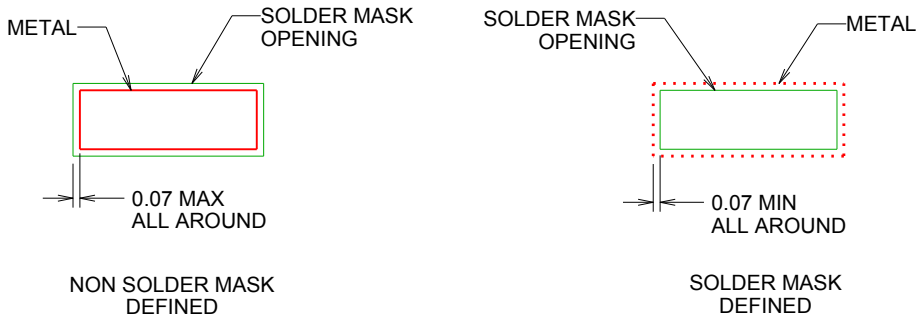

SOLDER MASK DETAILS

4218796/A 09/2013

NOTES: (continued)

5. Publication IPC-7351 may have alternate designs.
6. Solder mask tolerances between and around signal pads can vary based on board fabrication site.

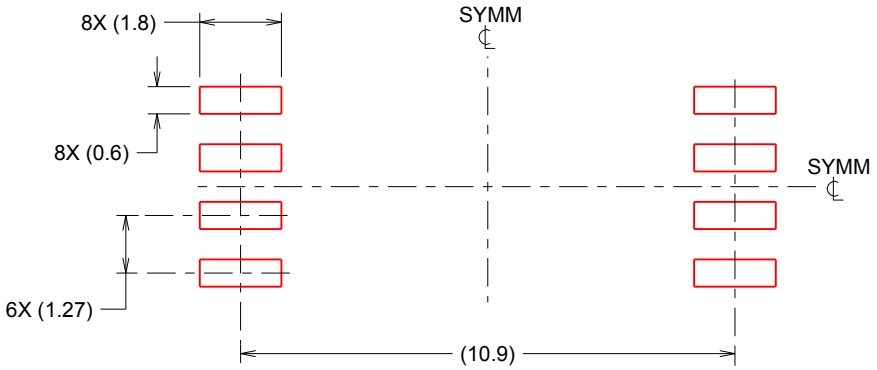

SOLDER PASTE EXAMPLE
BASED ON 0.125 mm THICK STENCIL
SCALE:6X

4218796/A 09/2013

NOTES: (continued)

7. Laser cutting apertures with trapezoidal walls and rounded corners may offer better paste release. IPC-7525 may have alternate design recommendations.
8. Board assembly site may have different recommendations for stencil design.

IMPORTANT NOTICE AND DISCLAIMER

TI PROVIDES TECHNICAL AND RELIABILITY DATA (INCLUDING DATA SHEETS), DESIGN RESOURCES (INCLUDING REFERENCE DESIGNS), APPLICATION OR OTHER DESIGN ADVICE, WEB TOOLS, SAFETY INFORMATION, AND OTHER RESOURCES “AS IS” AND WITH ALL FAULTS, AND DISCLAIMS ALL WARRANTIES, EXPRESS AND IMPLIED, INCLUDING WITHOUT LIMITATION ANY IMPLIED WARRANTIES OF MERCHANTABILITY, FITNESS FOR A PARTICULAR PURPOSE OR NON-INFRINGEMENT OF THIRD PARTY INTELLECTUAL PROPERTY RIGHTS.

These resources are intended for skilled developers designing with TI products. You are solely responsible for (1) selecting the appropriate TI products for your application, (2) designing, validating and testing your application, and (3) ensuring your application meets applicable standards, and any other safety, security, regulatory or other requirements.

These resources are subject to change without notice. TI grants you permission to use these resources only for development of an application that uses the TI products described in the resource. Other reproduction and display of these resources is prohibited. No license is granted to any other TI intellectual property right or to any third party intellectual property right. TI disclaims responsibility for, and you will fully indemnify TI and its representatives against, any claims, damages, costs, losses, and liabilities arising out of your use of these resources.

TI’s products are provided subject to TI’s Terms of Sale or other applicable terms available either on ti.com or provided in conjunction with such TI products. TI’s provision of these resources does not expand or otherwise alter TI’s applicable warranties or warranty disclaimers for TI products.

TI objects to and rejects any additional or different terms you may have proposed.

Mailing Address: Texas Instruments, Post Office Box 655303, Dallas, Texas 75265
Copyright © 2022, Texas Instruments Incorporated