VDA Series

• 150℃ 1,000Hrs assured.

Solvent-proof

- Vertical SMD type.
- Wide Temperature range.
- Suitable to fit for automotive equipment.
- Ecological capacitors are also available.
- **Halogen-free capacitors are also available.**

CDA → VDA
Wide Temp.

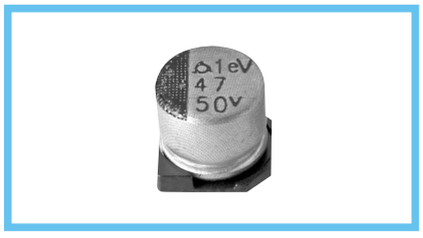

SPECIFICATIONS

Item	Characteristics
Rated Voltage Range	10 ~ 50 V_{DC}
Operating Temperature Range	-40 ~ +150 ℃
Capacitance Tolerance	±20%(M) (at 20℃, 120Hz)
Leakage Current	I=0.01CV(μA) or 3μA, whichever is greater. Where, I:Max. Leakage current(μA) C:Nominal capacitance(μF) V:Rated voltage(V_{DC}) (at 20℃, 2 minutes)
Dissipation Factor(Tanδ)	Rated voltage(V_{DC}): 10, 16, 25, 35, 50 Tanδ(Max.): 0.24, 0.20, 0.16, 0.14, 0.14 (at 20℃, 120Hz)
Temperature Characteristics (Max. Impedance ratio)	Rated voltage(V_{DC}): 10, 16, 25, 35, 50 Z(-25℃)/Z(+20℃): 6, 4, 3, 2, 2 Z(-40℃)/Z(+20℃): 12, 10, 8, 6, 6 (at 120Hz)
Load Life	The following specifications shall be satisfied when the capacitors are restored to 20℃ after the rated voltage is applied for 1,000 hours at 150℃. Capacitance change ≦ ±30% of the initial value Tanδ ≦ 300% of the initial specified value Leakage current ≦ The initial specified value
Shelf Life	The following specifications shall be satisfied when the capacitors are restored to 20℃ after exposing them for 1,000 hours at 150℃ without voltage applied. The rated voltage shall be applied to the capacitors for a minimum of 30 minutes, at least 24 hours and not more than 48 hours before the measurements. Capacitance change ≦ ±30% of the initial value Tanδ ≦ 300% of the initial specified value Leakage current ≦ The initial specified value
Others	Satisfied characteristics KS C IEC 60384-4

PART NUMBERING SYSTEM

VDA 16 VC 330 M J10 TP

- TP — With tape
- J10 — Case code
- M — Capacitance tolerance(±20%)
- 330 — Nominal capacitance code (ex. 0.1μF:R1, 1.0μF:1, 4.7μF:4R7, 10μF:10)
- VC — Lead type
- 16 — Rated voltage
- VDA — Series name

RATED RIPPLE CURRENT MULTIPLIERS

Frequency Multipliers

Freq.(Hz)	120	1K	10K	100K
Factor	1.00	1.36	1.50	1.50

DIMENSIONS OF VDA Series

Unit(mm)

DIMENSIONS

● Vibration Resistance

〈Size code:J10～K14〉 〈Size code:J10～K14〉

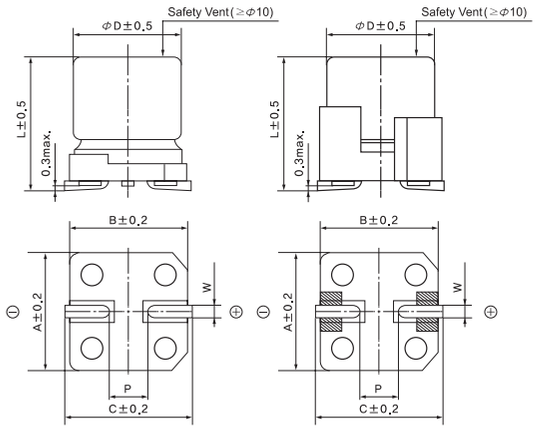

▨ : Dummy terminals

MARKING

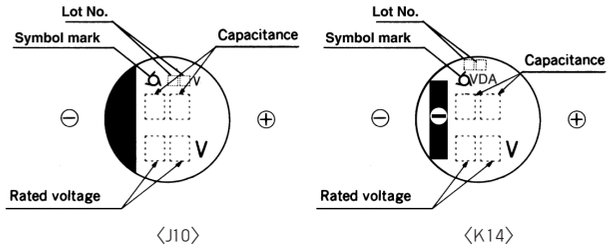

Recommended solder land on PC board

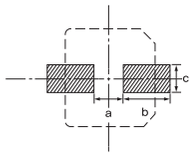

▨ : Solder land on PC board

Case code	ØD	L	A	B	C	W	P	a	b	c	a	b	c
J10	10	10	10.3	10.3	11.0	0.7～1.1	4.5	4.5	4.4	2.2	4.5	4.4	3.5
K14	12.5	13.5	13.0	13.0	13.7	1.0～1.3	4.2	4.0	5.7	2.5	3.4	6.3	9.3

● Vibration Resistance

RATINGS OF VDA Series

VDC / μF	10		16		25		35		50	
47							J10	90	J10	90
100					J10	123	J10	132	K14	167
220			J10	163	J10	183	K14	249		
330	J10	183	J10	200	K14	285				
470	J10	218	K14	304						
1,000	K14	405								

Rated Ripple Current (mArms/150˚C, 120Hz)

Case code