AEC-Q200 qualified

ALUMINUM ELECTROLYTIC CAPACITORS

APPROVAL NO.

BXQ 35 VC 680 (M)

SERIES	BXQ
RATING	35 V 680 ㎌
CASE SIZE	Ø10 × 10L

A. DIAGRAM OF DIMENSIONS

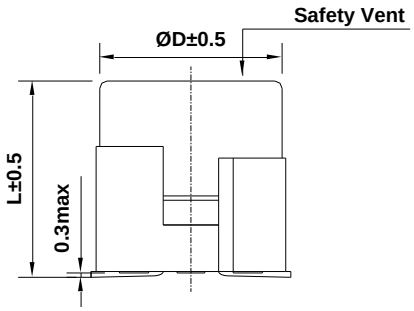

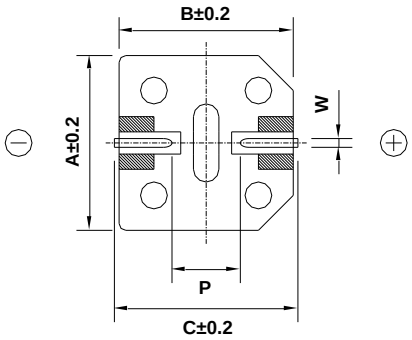

Recommended Solder land on PC board

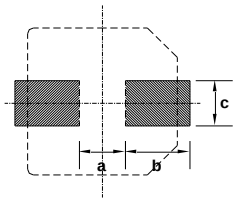

: Solder land on PC board

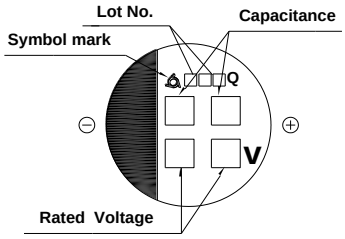

Case code	ØD	L	A	B	C	W	P	a	b	c
J10	10	10	10.3	10.3	11.0	0.7-1.1	4.5	4.5	4.4	3.5

B. ELECTRICAL CHARACTERISTICS

A. OPERATING TEMPERATURE RANGE : -55 ~ +105℃

B. RATED VOLTAGE : 35 V_{DC}

C. SURGE VOLTAGE : 44 V_{DC}

D. CAPACITANCE TOLERANCE : ± 20% at 20℃, 120㎐

E. LEAKAGE CURRENT : Lower 238㎂, after 2 minutes at 20℃

F. DISSIPATION FACTOR (TANδ) : Lower 0.12 at 20℃, 120㎐

G. RATED RIPPLE CURRENT : 1190 mArms at 105℃, 100㎑

H. RATED RIPPLE CURRENT MULTIPLIERS (Frequency Multipliers) :

Freq.(㎐)	120	1k	10k	100k
Factor	0.60	0.87	0.95	1.00

I. TEMPERATURE CHARACTERISTIC (Max.Impedance ratio) :

Z(-25℃) / Z(20℃)	2
Z(-55℃) / Z(20℃)	3

(at 120㎐)

J. LOAD LIFE : The following specifications shall be satisfied when the capacitors are restored to 20℃ after the rated voltage is applied for 2,000 hours at 105℃.

Capacitance change ≤ ± 30% of the initial value

Tanδ ≤ 300 % of the initial specified value

Leakage Current ≤ The initial specified value

K. SHELF LIFE : The following specifications shall be satisfied when the capacitors are restored to 20℃ after exposing them for 1,000 hours at 105℃ without voltage applied. The rated voltage shall be applied to the capacitors for a minimum of 30 minutes, at least 24 hours and not more than 48 hours before the measurement.

Capacitance change ≤ ± 30% of the initial value

Tanδ ≤ 300 % of the initial specified value

Leakage Current ≤ The initial specified value

L. CLEANING CONDITIONS : Solvent-proof

M. OTHERS : Satisfied characteristics KS C IEC 60384-4

※ ESR(20℃,100㎑) : 0.075 (Ω) ↓