BXE Series

• 105℃ 1,000~2,000Hrs assured.

Solvent-proof

- Vertical SMD type.
- Very low Impedance.
- For STB, Satellite Radio, Computer Server.
- RoHS compliant.
- Halogen-free capacitors are also available.

BXA → BXE
Low Imp.

SPECIFICATIONS

Item	Characteristics
Rated Voltage Range	6.3 ~ 35 VDC
Operating Temperature Range	-55 ~ +105℃
Capacitance Tolerance	±20%(M) (at 20℃, 120Hz)
Leakage Current	I=0.01CV(μA) or 3μA, whichever is greater. Where, I:Max. Leakage current(μA), C:Nominal capacitance(μF), V:Rated voltage(VDC) (at 20℃, 2 minutes)
Dissipation Factor(Tanδ)	Rated Voltage(VDC): 6.3 / 10 / 16 / 25 / 35 Tanδ (Max.): 0.26 / 0.19 / 0.16 / 0.14 / 0.12 (at 20℃, 120Hz)
Temperature Characteristics (Max. Impedance ratio)	Rated voltage(VDC): 6.3 / 10 / 16 / 25 / 35 Z(-25℃)/Z(20℃): 3 / 2 / 2 / 2 / 2 Z(-55℃)/Z(20℃): 5 / 4 / 4 / 3 / 3 (at 120Hz)
Load Life	The following specifications shall be satisfied when the capacitors are restored to 20℃ after the rated voltage is applied with the following conditions. ø4~ø6.3 : 105℃, 1,000 hours, ø8 & ø10 : 105℃, 2,000 hours. Capacitance change ≦ ±30% of the initial value Tanδ ≦ 200% of the initial specified value Leakage current ≦ The initial specified value
Shelf Life	The following specifications shall be satisfied when the capacitors are restored to 20℃ after exposing them for 1,000 hours at 105℃ without voltage applied. The rated voltage shall be applied to the capacitors for a minimum of 30 minutes, at least 24 hours and not more than 48 hours before the measurements. Capacitance change ≦ ±30% of the initial value Tanδ ≦ 200% of the initial specified value Leakage current ≦ The initial specified value
Others	Satisfied characteristics KS C IEC 60384-4

PART NUMBERING SYSTEM

BXE 16 VC 100 M F60 TP

- TP: With tape
- F60: Case code
- M: Capacitance tolerance(±20%)
- 100: Nominal capacitance code (ex. 0.1μF:R1, 1.0μF:1, 4.7μF:4R7, 10μF:10)
- VC: Lead type
- 16: Rated voltage
- BXE: Series name

RATED RIPPLE CURRENT MULTIPLIERS

Frequency Multipliers

Cap.(μF) \ Freq.(Hz)	120	1K	10K	100K
4.7	0.35	0.70	0.90	1.00
10 ~ 100	0.40	0.75	0.90	1.00
220 ~ 470	0.50	0.85	0.94	1.00
1,000 ~ 1,500	0.60	0.87	0.95	1.00

DIMENSIONS OF BXE Series

Unit(mm)

DIMENSIONS

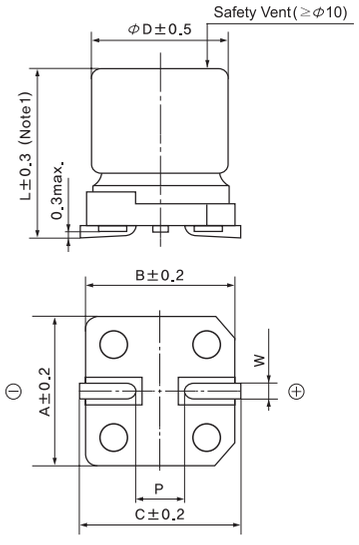

MARKING

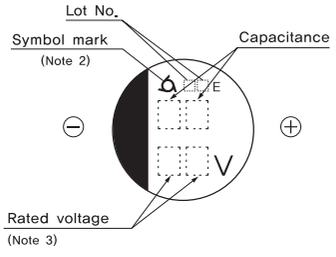

Note 1 : L±0.5 for 8×10(H10), 10×10(J10)
Note 2 : 4×5.3(D56), 5×5.3(E56) is excluded symbol mark.
Note 3 : 6.3WV is marked by 6V.

Case code	ø D	L	A	B	C	W	P	a	b	c
D56	4	5.3	4.3	4.3	5.1	0.5～0.8	1.0	1.0	2.6	1.6
E56	5	5.3	5.3	5.3	5.9	0.5～0.8	1.4	1.4	3.0	1.6
F60	6.3	5.7	6.6	6.6	7.2	0.5～0.8	1.9	1.9	3.5	1.6
F80	6.3	7.7	6.6	6.6	7.2	0.5～0.8	1.9	1.9	3.5	1.6
H10	8	10	8.3	8.3	9.0	0.7～1.1	3.1	3.1	4.2	2.2
J10	10	10	10.3	10.3	11.0	0.7～1.1	4.5	4.5	4.4	2.2

Recommended solder land on PC board

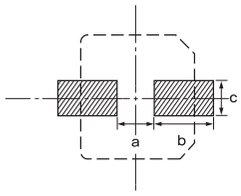

▨ : Solder land on PC board

RATINGS OF BXE Series

μF \ VDC	6.3			10			16			25			35		
4.7													D56	1.80	85
10										D56	1.80	85	E56	0.80	155
22				D56	1.80	85	E56	0.80	155	E56	0.80	155	E56	0.80	155
33	D56	1.80	85	E56	0.80	155	F60	0.36	240	F60	0.36	240	F60	0.36	240
47	E56	0.80	155	F60	0.36	240	F60	0.36	240	F60	0.36	240	F60	0.36	240
68	F60	0.36	240	F60	0.36	240	F60	0.36	240	F60	0.36	240	F80	0.34	280
100	F60	0.36	240	F60	0.36	240	F60	0.36	240	F80	0.34	280	H10	0.16	600
220	F60	0.36	240	F80	0.34	280	F80	0.34	280	H10	0.16	600	H10	0.16	600
330	F80	0.34	280	H10	0.16	600	H10	0.16	600	H10	0.16	600	J10	0.08	850
470	H10	0.16	600	H10	0.16	600	H10	0.16	600	J10	0.08	850			
1,000	H10	0.16	600	J10	0.08	850									
1,500	J10	0.08	850												

Rated Ripple Current (mArms/105℃, 100kHz)
Impedance (Ω max./20℃, 100kHz)
Case code