ALUMINUM ELECTROLYTIC CAPACITORS

APPROVAL NO. 11034

BDS 50 VC 22 (M)		
	SERIES	BDS
	RATING	50 V 22 μF
	CASE SIZE	Ø 6.3 × 5.7 L

A. DIAGRAM OF DIMENSIONS

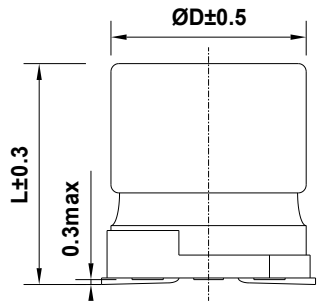

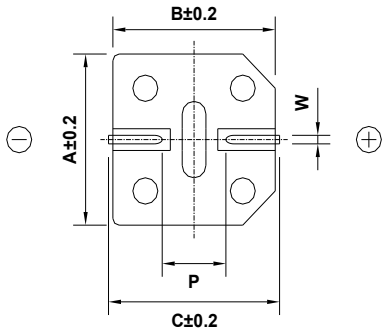

Recommended Solder land on PC board

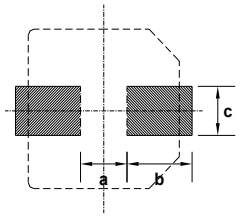

: Solder land on PC board

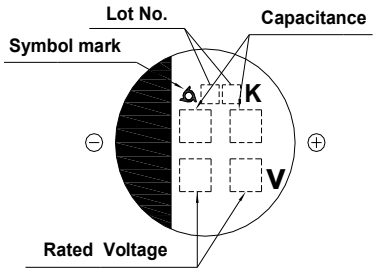

Case code	ØD	L	A	B	C	W	P	a	b	c
F60	6.3	5.7	6.6	6.6	7.2	0.5-0.8	1.9	1.9	3.5	1.6

B. ELECTRICAL CHARACTERISTICS

A. OPERATING TEMPERATURE RANGE : - 40 ~ +105℃

B. RATED VOLTAGE : 50 V_{DC}

C. SURGE VOLTAGE : 63 V_{DC}

D. CAPACITANCE TOLERANCE : ± 20% at 20℃, 120㎐

E. LEAKAGE CURRENT : Lower 11 ㎂, after 2 minutes at 20℃

F. DISSIPATION FACTOR (TAN δ) : Lower 0.14 at 20℃, 120㎐

G. RATED RIPPLE CURRENT : 48 mArms at 105℃, 120㎐

H. RATED RIPPLE CURRENT MULTIPLIERS (Frequency Multipliers) :

Freq.(㎐)	120	1k	10k	100k
Factor	1.00	1.05	1.08	1.08

I. TEMPERATURE CHARACTERISTIC (Max.Impedance ratio) :

Z(-25℃) / Z(20℃)	3
Z(-40℃) / Z(20℃)	4

(at 120㎐)

I. LOAD LIFE : The following specifications shall be satisfied when the capacitors are restored to 20℃ after the rated voltage applied for 1,000 hours at 105℃.

Capacitance change ≤ ±30% of the initial value

Tan δ ≤ 300 % of the initial specified value

Leakage Current ≤ The initial specified value

J. SHELF LIFE : The following specifications shall be satisfied when the capacitors are restored to 20℃ after exposing them for 500 hours at 105℃ without voltage applied.
The rated voltage shall be applied to the capacitors for a minimum of 30 minutes, at least 24 hours and not more than 48 hours before the measurements.

Capacitance change ≤ ±25% of the initial value

Tan δ ≤ 200 % of the initial specified value

Leakage Current ≤ The initial specified value

K. CLEANING CONDITIONS : Solvent-proof

L. OTHERS : Satisfied characteristics KS C IEC 60384-4