Product Approval Sheet

Safety

Customer : Ropla

Issued no : 2020. 05. 13.
Revision no :

- Product description : Series Impedance film capacitors
- Product code : P347F31104KA01
- Application :

CUSTOMER			
PILKOR	Checked	Confirmed	Approved

Headquarters : 381, Woncheon-dong, Yeong tong-gu, Suwon-si, Gyeonggi-do, Korea
PILKOR Electronics Division (of COWELL Fashion Co., Ltd.)
TEL. +82-31-217-2500 FAX. +82-31-217-7465

China factory : No 25 Zoutai South Road Rongcheng City, Shandong Province China
Rongcheng PILKOR Electronics Co., Ltd.
TEL. +86-631-755-6001~3 FAX. +86-631-755-6004

* Please send it back to us before placing order.

목 차 *(Contents)*

Safety

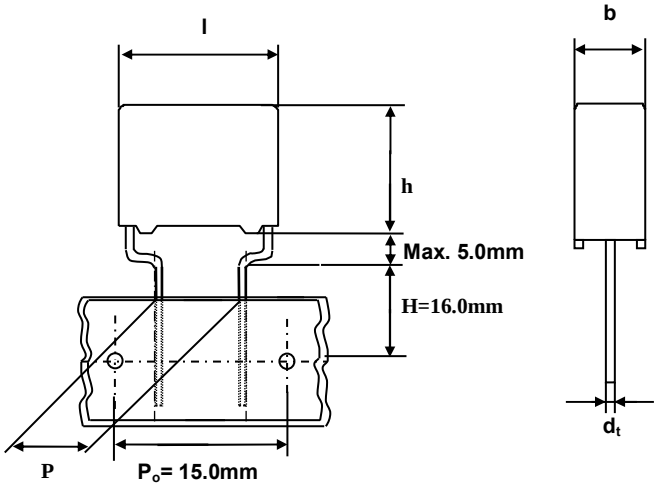

Voltage V~	Cap. µF	Code P347	C-tol.	Dimensions b × h × l mm	P mm	dt mm
310	0.1	F31104KA01	± 10 %	6.0 x 12.0 x 18.0	10.0± 0.4	0.8+0.08/-0.05

< BUT >

- ***PITCH : 4E Y- Kink AMMO***

- ***Packing Method (AMMO PACKING)***

Packing method	SPQ (Inner box)	PQ (Outer box)
8242 450 40009	460 (8242 451 30493)	2300 (8242 451 30343)

Series Impedance Film capacitors

Safety

PCX2 347(P347)

MKT RADIAL POTTED CAPACITORS **Pitch 10.0/15.0/22.5/27.5mm**

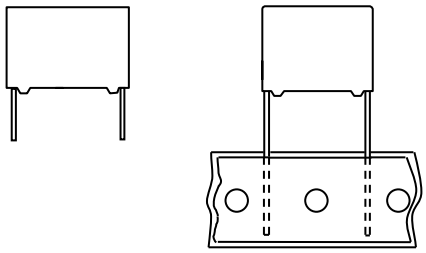

10.0 and 15.0mm

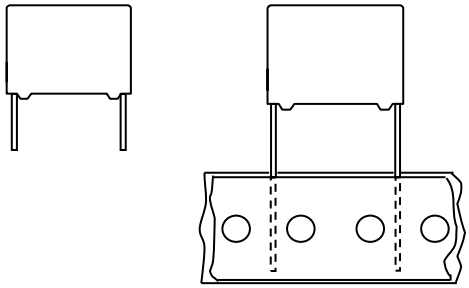

22.5 and 27.5mm

QUICK REFERENCE DATA

Capacitance range (E6 series) *	0.01μF to 2.2μF
Capacitance tolerance	± 10 %, ± 20 %
Rated (AC) voltage 50 to 60 Hz	310 V~
Climatic category	55/110/56
Temperature range	-55℃ ~ +110℃
Reference IEC, UL specification	IEC 60384-14(3rd edition) and UL60384-14
Safety approvals	ENEC, KC, CQC UL60384-14
Potting & Encapsulation material	Qualified in accordance with UL 94V-0
Safety class	X2

* Intermediate values of the E12 series are available to special order

FEATURES

. 10.0 to 27.5 mm lead pitch
. Supplied loose in box and taped on reel
. Consist of a low-inductive wound cell of Metallized Polyester film, potted in a flame retardant case

APPLICATIONS

. For X2-electromagnetic interference suppression
. Specially designed to meet the NEW REQUIREMENTS in new IEC 60384-14 specification(3rd edition)/UL 60384-14 requiring for X2 a 2.5kV peak pulse voltage test
. Energy meter
. Stable capacitance in damp environment 85℃85%RH, 240Vac, 1000hours

Main application _ In series with the powerline (capacitive power supply)

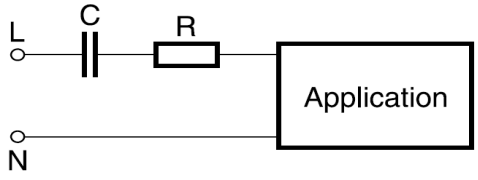

Ordering Information (New Code)

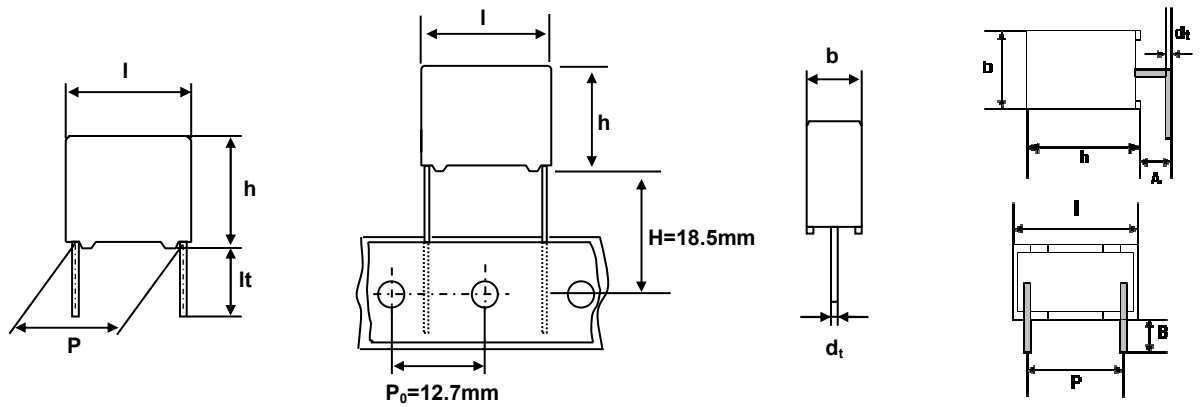

< Ammo Tapping >

< ㄱ-forming >

1	2	3	4	5	6	7	8	9	10	11	12	13	14
P	3	4	7	F	3	1	1	0	4	K	A	0	1

Digits 1~4	
Code	Series name
P347	PCX2 347

Digits 5	
Code	Pitch
D	10.0 mm
F	15.0 mm
J	22.5 mm
L	27.5 mm

Digits 6~7	
Code	Voltage
31	310V

Digits 8~10	
Code	Capacitance
104	0.1uF
105	1.0uF

Digits 12	
Code	Revision
A	Standard

Digits 11	
Code	Cap. tolerance
J	±5%
K	±10%
M	±20%

Digits 13	
Code	Lead length [mm]
A	Taping(straight)
B	3E Y-kink
L	25.0±2.0
S	5.0±1.0
8	3.8±0.3
7	3.7±0.3
4	3.4±0.3
2	3.2±0.3
D	A:3.0±0.5/B:3.2±0.3*
G	A:3.0±0.5/B:3.4±0.3*
H	A:3.0±0.5/B:3.7±0.3*
J	A:3.0±0.5/B:3.8±0.3*
0	Special

* ㄱ-forming

Digits 14		
Code	Lead type	Packing
L	2-PIN	Loose in box
A	2-PIN	Ammo(12.7mm)
B	2-PIN	Ammo(15.0mm)
V	2-PIN	*)Vinyl
2	2-PIN	**)Arrange(Folding paper+Sponge+Paper box)

SAFETY APPROVALS

SAFETY APPROVALS	Voltage	Value	File Number
UL60384-14	310V(AC)	0.01μF to 2.2μF	E165646
ENEC(SEMKO) *	310V(AC)	0.01μF to 2.2μF	SE/0256-7
KC	310V(AC)	C ≤ 0.1μF 0.1μF < C ≤ 0.33μF 0.33μF < C ≤ 1.0μF	SH03001-14001 SH03001-14002 SH03001-14003
CQC	310V(AC)	4.7nF to 2.2μF	CQC16001153987

* The ENEC-approval together with the CB-Certificate replace all national approval marks of the following countries(they have already signed the ENEC-Agreement): Austria; Belgium; Czech. Republic; Denmark; Finland; France; Germany; Greece; Hungary; Ireland; Italy; Luxembourg; Netherlands; Norway; Portugal; Slovenian; Spain; Sweden; Switzerland and United Kingdom

Packaging Information

SMALLEST PACKING QUANTITIES (SPQ)	LOOSE IN BOX	
DIMENSIONS	lt = 5.0 ± 1.0 mm	lt = 25 ± 2.0 mm
4.0 x 10.0 x 12.5	2000	1000
5.0 x 11.0 x 12.5	1500	1000
6.0 x 12.0 x 12.5	1000	1000
6.0 x 12.0 x 18.0	1000	1000
7.0 x 13.5 x 18.0	1000	1000
8.5 x 13.5 x 18.0	1000	1000
8.5 x 15.0 x 18.0	1000	1000
10.0 x 16.5 x 18.0	1000	1000
11.0 x 18.5 x 18.0	1000	1000
7.0 x 16.5 x 26.0	1000	1000
8.5 x 18.0 x 26.0	500	500
10.0 x 19.5 x 26.0	500	500
12.0 x 22.0 x 26.0	500	500
16.5 x 22.0 x 26.0	250	250
9.0 x 18.0 x 31.0	500	500
10.0 x 20.0 x 31.0	500	250
11.0 x 21.0 x 31.0	500	250
13.0 x 23.0 x 31.0	250	250
21.0 x 31.0 x 31.0	150	150

SPECIFIC REFERENCE DATA FOR 310 V_{AC}

Tangent of loss angle	at 1 khz	at 10 khz
C ≤ 1 µF C > 1 µF	≤ 80 x 10^{-4} ≤ 80 x 10^{-4}	≤ 150 x 10^{-4} -
Rated voltage pulse slope $(dV/dt)_R$	100 V/µs	
R between leads, for C ≤ 0.33 µF	〉15 000 MΩ	
RC between leads, for C > 0.33 µF	〉5 000 s	
Withstanding(DC) Voltage (cut-off current 10mA)	4.3* V_R, 1min	
Withstanding(AC) Voltage between leads and case	2400V 1min	

V_{Rac} = 310V~ X2 **loose and taped**

Cap. (µF)	b x h x l (mm)	MASS (g)	CATALOGUE NUMBER loose in box lt = 5 ± 1.0 mm	
			C – tol. ± 20 %	C – tol. ± 10 %
Pitch = 10.0 ± 0.4 mm dt = 0.6 +0.06/-0.05 mm				
0.01	4.0 x 10.0 x 12.5	0.8	P347D31103MASL	P347D31103KASL
0.015	4.0 x 10.0 x 12.5	0.8	P347D31153MASL	P347D31153KASL
0.022	4.0 x 10.0 x 12.5	0.8	P347D31223MASL	P347D31223KASL
0.033	5.0 x 1 1.0 x 12.5	0.9	P347D31333MASL	P347D31333KASL
0.047	5.0 x 11.0 x 12.5	0.9	P347D31473MASL	P347D31473KASL
0.068	6.0 x 12.0 x 12.5	1.0	P347D31683MASL	P347D31683KASL
0.082	6.0 x 12.0 x 12.5	1.0	P347D31823MASL	P347D31823KASL
0.1	6.0 x 12.0 x 12.5	1.0	P347D31104MASL	P347D31104KASL
Pitch = 15.0 ± 0.4 mm dt = 0.8 +0.08/-0.05 mm				
0.1	6.0 x 12.0 x 18.0	1.4	P347F31104MASL	P347F31104KASL
0.15	7.0 x 13.5 x 18.0	1.9	P347F31154MASL	P347F31154KASL
0.22	8.5 x 15.0 x 18.0	2.6	P347F3122MASL	P347F31224KASL
0.33	10.0 x 16.5 x 18.0	3.1	P347F31334MASL	P347F31334KASL
0.47	11.0 x 18.5 x 18.0	4.1	P347F31474MASL	P347F31474KASL
Pitch = 22.5 ± 0.4 mm dt = 0.8 +0.08/-0.05 mm				
0.33	7.0 x 16.5 x 26.0	3.2	P347J31334MASL	P347J31334KASL
0.47	8.5 x 18.0 x 26.0	4.4	P347J31474MASL	P347J31474KASL
0.68	10.0 x 19.5 x 26.0	5.5	P347J31684MASL	P347J31684KASL
1.0	12.0 x 22.0 x 26.0	9.0	P347J31105MASL	P347J31105KASL
1.5	16.5 x 22.0 x 26.0	10.0	P347J31155MASL	P347J31155KASL
Pitch = 27.5 ± 0.4 mm dt = 0.8 +0.08/-0.05 mm				
0.47	9.0 x 19.0 x 31.0	5.5	P347L31474MASL	P347L31474KASL
0.68	10.0 x 20.0 x 31.0	6.5	P347L31684MASL	P347L31684KASL
1.0	11.0 x 21.0 x 31.0	7.8	P347L31105MASL	P347L31105KASL
1.5	13.0 x 23.0 x 31.0	10.4	P347L31155MASL	P347L31155KASL
2.2	21.0 x 31.0 x 31.0	20.5	P347L31225MASL	P347L31225KASL

MOUNTING

NORMAL USE
The capacitors are designed for mounting on printed-circuit boards.
The capacitors packed in bandoliers are designed for mounting on printed-circuit boards by means of automatic insertion machines.
For detailed specifications refer to chapter "PACKAGING".

SPECIFIC METHOD OF MOUNTING TO WITHSTAND VIBRATION AND SHOCK
In order to withstand vibration and shock tests, it must be ensured that the stand-off pips are in good contact with the printed-circuit board.
. For pitches of 15mm the capacitors shall be mechanically fixed by leads.
. For larger pitches the capacitors shall be mounted in the same way and the body clamped.

SPACE REQUIREMENTS ON PRINTED-CIRCUIT BOARD

The maximum length and width of film capacitors are shown in the following drawing ;

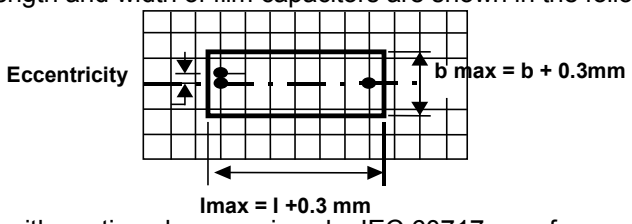

- Product height with seating plane as given by IEC 60717 as reference : $h_{max} \leq$ h+0.3mm

STORAGE TEMPERATURE

. Storage temperature : T_{stg} = -25 to +40 °C with RH maximum 80% without condensation.

RATINGS AND CHARACTERISTICS

Unless otherwise specified all electrical values apply to an ambient temperature of 23± 1℃, an atmospheric pressure of 86 to 106kPa and a relative humidity 50± 2%.

For reference testing, a conditioning period shall be applied of 96± 4 hours by heating the products in a circulating air oven at the rated temperature and a relative humidity not exceeding 20%.

Maximum RMS Voltage as a function of frequency

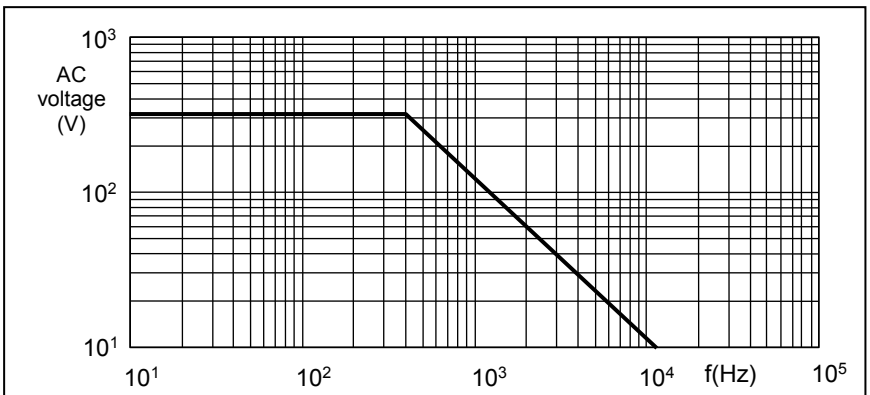

AC voltage (RMS value) as a function of frequency at Tamb ≤ 110℃

APPLICATION NOTE

To ensure withstanding high humidity requirements in the application it is recommended not to damage the epoxy adhesion at the leads. Therefore the leads may not be damaged or bent before soldering.

PRODUCT MARKING

Capacitors are marked with having following information;
1.Manufacturer (PILKOR)
2.Manufacturer's type designation (PCX2 347)
3.Rated capacitance in code according to IEC 60062
4.Rated (AC) voltage (310V~)
5.Sub class (X2)
6.Tolerance on rated capacitance M =± 20 % K = ± 10 %
7.Climatic category (55/110/56)
8.Metallized polyester film (MKT)
9.Year and week of manufacturing (e.g 1215)
10.Safety approvals
* white or black color

Example of marking

Marking on the side or top

Marking on the side or top

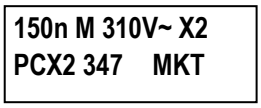

Marking on the top

Marking on the side

Marking on the top

PACKAGE MARKING

The package containing the capacitors in marking as shown.

For C ≤ 1uF

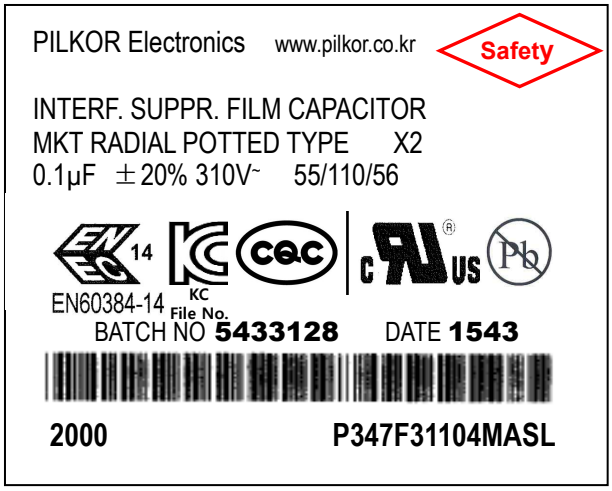

For 1uF < C

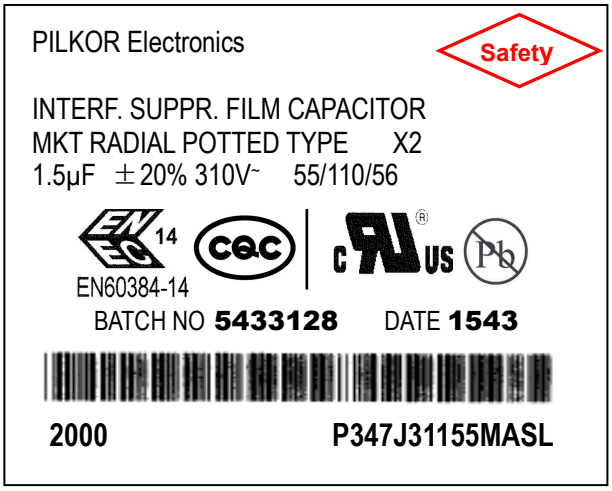

1 Manufacturer's name
2 Sub-family
3 Type description and safety class X2
4 Capacitance value, tolerance, voltage
and climatic category (IEC)
5 Safety approvals & Lead free marking(JEDEC-STD-97)
6 Batch nr. & production period year and week code
7 Quantity and Product code (12NC)

*** Color of Label : White

Color of Safety Marking : Red

INSPECTION REQUIREMENTS

Note 1 : Sub-clause numbers of tests and performance requirements refer to the Sectional Specification, IEC 384-14 and Section One this specification.

Note 2 : Inspection levels are selected from IEC-Publication 410: Sampling Plans and Procedures for inspection by attributes.

Note 3 : In this table :
- **p = periodicity in months**
- **n = sample size**
- **D = destructive**
- **ND = non-destructive**
- **IL = inspection level) IEC 410**
- **AQL = acceptance quality level)**

Note 4 : For this capacitors, considered as a solid construction, the periodicity of the vibration and shock test is reduced from 36 months to 6 months.

Clause number and Test	D or ND	Condition	IL	n	Performance Requirements
Group A inspection (lot by lot)					
Sub-Group A1	ND				
4.1 Visual examination		Detail	S4	1)	No visual damage , legible marking and as specified in Marking specification
4.1 Dimensions 2)			S3	1)	As specified in dimension table of this specification
Sub-Group A2 3)	ND				
4.2.2 capacitance		At 1kHz			Within specified tolerance
4.2.3 Tangent of loss angle		At 10kHz C ≤ 1µF At 1kHz C > 1µF			As in rating and characteristics of this specification
4.2.1 Voltage proof (test A)		4.3*V_R 1min			No permanent breakdown (cut-off current 10mA) or flash over Self-healing allowed
4.2.5 Insulation resistance (test A)		At 100V 1min.			As in rating and characteristics of this specification

1) Number to be tested : Sample size as directly allotted to the code letter for IL in Table 2A of IEC 410 (Single sampling plan for normal inspection)
The acceptance number complies with AQL value : 0.65 %

2) This test may be replaced by in-production testing, if SPC on dimensional measurements or other mechanisms to avoid parts exceeding the limits is installed.

3) The 100% End-of-line testing is followed by re-inspection by sampling in order to monitor outgoing quality level by defectives per million (DPM). The sampling level and the calculation of DPM values is in accordance with CECC 00 014, counting any parametric failure as a defective. In case one or more defectives occur in a lot, this lot shall be rejected.

Clause number and Test	D or ND	Condition	n	Performance Requirements
Group C inspection (periodic)			6	
Sub-group C1A Part of a sample of sub-group C1	D			
4.1 dimension (detail)				As specified in dimension table of this specification
4.3.1 initial measurement		1. Capacitance at 1kHz 2. Tangent of loss angle at 10kHz C ≤ 1μF at 1kHz C > 1μF		
4.3 robustness of terminations		Tensile and bending		No visible damage
4.4 resistance to soldering heat		Method : 1A Solder bath : 260℃ Duration : 10 s		
4.14 component solvent resistance		Isopropylalcohol at room temperature Method : 2 Immersion time : 5± 0.5min Recovery time: min 1hour max 2hours		
4.4.2 final measurements		Visual examination		No visible damage Legible marking
		1. Capacitance at 1kHz		△C/C ≤ 5% of the value measured initially
		2. Tangent of loss angle at 10kHz C ≤ 1μF at 1kHz C > 1μF		Increase of tanD For C ≤ 1μF < 0.0080 For C > 1μF < 0.0050
		Insulation resistance		As in rating and characteristics of this specification

Clause number and Test	D or ND	Condition	n	Performance Requirements
Group C inspection (periodic)				
Sub-group C1B Other part of a sample of sub-group C1	D		12	
4.6.1 initial measurement		1. Capacitance at 1kHz 2. Tangent of loss angle at 10kHz C ≤ 1μF at 1kHz C > 1μF		
4.6 rapid change of temperature		⊖ A = lower category temperature ⊖ B = upper category temperature 5 cycles duration time : 30 min		
4.7 vibration (see note 4)		Method of mounting : see the mounting of this specification Procedure : B4 Frequency range 10Hz to 55Hz amplitude : 0.75mm or acceleration 98m/s^2(which is less severe) Total duration : 6 hours		
4.7.2 final examination		Visual examination		No visible damage
4.9 shock (see note 4)		Method of mounting : see the mounting of this specification Pulse shape : half sine Acceleration : 490 m/s^2 Duration of pulse : 11ms		
4.9.3 final measurements		Visual examination 1. Capacitance at 1kHz 2. Tangent of loss angle at 10kHz C ≤ 1μF at 1kHz C > 1μF Insulation resistance		No visible damage Δ C/C ≤ 5% of the value measured initially Increase of tanD For C ≤ 1μF < 0.0080 For C > 1μF < 0.0050 As in rating and characteristics of this specification

Clause number and Test	D or ND	Condition	n	Performance Requirements
Group C inspection (periodic)				
Sub-group C1 Combined sample of specimens of sub-groups C1A and C1B	D		18	
4.11 climatic sequence 4.11.2 dry heat 4.11.3 damp heat cyclic test Db, first cycle 4.11.4 cold 4.11.6 damp heat cyclic test Db, remaining cycle 4.11.6.2 final measurements		 $T = T_{upper\text{-}category\ temperature}$ Duration : 16 hours $T = T_{lower\text{-}category\ temperature}$ Duration : 2 hours Visual examination 1. Capacitance at 1kHz 2. Tangent of loss angle at 10kHz C ≤ 1μF at 1kHz C > 1μF Insulation resistance Voltage proof 4.3*V_R (DC) for 1min		 No visible damage Legible marking Δ C/C ≤ 5% of the value measured initially Increase of tanD For C ≤ 1μF < 0.0080 For C > 1μF < 0.0050 ≥ 50% of values in ratings and characteristics of this specification No permanent breakdown or flash over

Clause number and Test	D or ND	Condition	n	Performance Requirements
Sub-group C2	D		10	
4.12 damp heat steady state 4.12.1 initial measurements 4.12.3 final measurements		56 days, 40℃ 90 – 95% R.H 1. Capacitance at 1kHz 2. Tangent of loss angle at 10kHz C ≤ 1μF at 1kHz C > 1μF Visual examination 1. Capacitance at 1kHz 2. Tangent of loss angle at 10kHz C ≤ 1μF at 1kHz C > 1μF Voltage proof 4.3*V_R (DC) for 1min Insulation resistance		No visible damage Legible marking △ C/C ≤ 5% of the value measured initially Increase of tanD For C ≤ 1μF < 0.0080 For C > 1μF < 0.0050 No permanent breakdown or flash over ≥ 50% of values in ratings and characteristics of this specification

Clause number and Test	D or ND	Condition	n	Performance Requirements
Sub-group C3	D		12	
4.13.1 initial measurements		1. Capacitance at 1kHz 2. Tangent of loss angle at 10kHz C ≤ 1μF at 1kHz C > 1μF		
4.13 peak impulse voltage		3 successive impulse, full wave, peak voltage : for C ≤ 1μF : 2.5kV for C > 1μF : 2.5kV/√ C (C in μF) max : 24 pulses		No selfhealing breakdown or flashover
4.14 endurance test		Duration : 1000 hours 1.25 x V_{Rac} at 85℃ 1.1 x V_{Rac} at 110℃ via a resistor of 47Ω ± 5% 47ohm should be located outside of oven or 47ohm's location in oven should be selected that heat generation of 47ohm is not to influence the capacitor's temperature.		
4.12.3 final measurements		Visual examination 1. Capacitance at 1kHz 2. Tangent of loss angle at 10kHz C ≤ 1μF at 1kHz C > 1μF Insulation resistance Voltage proof 4.3*V_R (DC) for 1min		No visible damage Legible marking Δ C/C ≤ 10% of the value measured initially Increase of tanD For C ≤ 1μF < 0.0080 For C > 1μF < 0.0050 ≥ 50% of values in ratings and characteristics of this specification No permanent breakdown or flashover

Clause number and Test	D or ND	Condition	n	Performance Requirements
Sub-group C4	D		6	
4.15.1 initial measurements		1. Capacitance at 1kHz 2. Tangent of loss angle at 10kHz C ≤ 1μF at 1kHz C > 1μF		
4.15 charge and discharge		10000 cycles : charge to V_R half sine wave Duration : 5ms Discharge resistance $R = \frac{V_{RAC} \times \sqrt{2}}{1.5 \times C \times (dU/dt)}$ with a minimum : 2.2Ω		
4.15.3 final measurements		1. Capacitance at 1kHz 2. Tangent of loss angle at 10kHz C ≤ 1μF at 1kHz C > 1μF Insulation resistance		Δ C/C ≤ 10% of the value measured initially Increase of tanD For C ≤ 1μF < 0.0080 For C > 1μF < 0.0050 ≥ 50% of values in ratings and characteristics of this specification

<table>
<tr><th>Clause number and Test</th><th>D or ND</th><th>Condition</th><th>n</th><th>Performance Requirements</th></tr>
<tr><td>Sub-group C6</td><td>D</td><td></td><td>18</td><td></td></tr>
<tr><td>4.17 passive flammability</td><td></td><td>Bore of gas jet : ϕ 0.5 mm
Fuel : Butane
Test duration for actual volume V in mm^3

class C

<table><tr><th>Volume(mm^3)</th><th>Gas jet</th></tr><tr><td>V ≤ 250</td><td>5s</td></tr><tr><td>250 〈 V ≤ 500</td><td>10s</td></tr><tr><td>500 〈 V ≤ 1750</td><td>20s</td></tr><tr><td>V ＞1750</td><td>30s</td></tr></table>
One flame application
 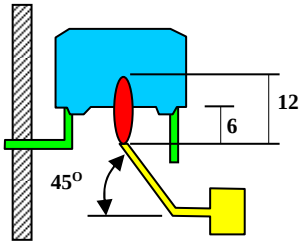 </td><td></td><td>1.class C
After removing test flame from capacitor, the capacitor must not continue burn for more than 30 s.

2.No burning particle must drop from the sample</td></tr>
<tr><td>Sub-group C7</td><td>D</td><td></td><td>24</td><td></td></tr>
<tr><td>4.18 active flammability</td><td></td><td>20 discharges of a 3 uF tankcapacitor across the test capacitor. The test capacitor during the discharges connected to V_R (16A). V_R is maintained for 2 min after the last discharge</td><td></td><td>The cheese cloth around the capacitor shall not burn with a flame. Not electrical measurements are required.</td></tr>
</table>

Clause number and Test	D or ND	Condition	n	Performance Requirements
Sub-group ADD1	D		10	
A.1 Solder ability Solvent resistance of the marking		Without aging Method : 1 Non-activated colophiny flux 501 Solder bath : 245℃ Dwell time : 3 s Isopropylalcohol at room temperature. Method : 1 Rubbing material cotton wool Immersion time : 5± 0.5min		Good tinning as evidenced by free flowing of the solder with wetting of the termination(> 95%) Legible marking
Sub-group ADD2	D		12	
A.2 Heat storage A.2.1 Initial measurement A.2.2 Final measurement		Duration : 1000h Temperature : upper category temperature 1. Capacitance at 1kHz 2. Tangent of loss angle at 10kHz C ≤ 1μF at 1kHz C > 1μF 1. Capacitance at 1kHz 2. Tangent of loss angle at 10kHz C ≤ 1μF at 1kHz C > 1μF Insulation resistance		 △C/C ≤ 5% of the value measured initially Increase of tanD For C ≤ 1μF < 0.0080 For C > 1μF < 0.0050 As in Rating and CHARACTERISTICS of this specification

Clause number and Test	D or ND	Condition	n	Performance Requirements
Sub-group ADD3	D		9	
A.3 Detergent resistance A3.1 Initial measurement A.3.2 Final measurement		Density 20g/L dishwasher detergergent Temperature 70℃ during 3 minutes followed by rinsing in clear water for 1 minute Recovery time : 1 to 2 hours 1. Capacitance at 1kHz 2. Tangent of loss angle at 10kHz C ≤ 1μF at 1kHz C > 1μF 1. Capacitance at 1kHz 2. Tangent of loss angle at 10kHz C ≤ 1μF at 1kHz C > 1μF Insulation resistance		Good tinning as evidenced by free flowing of the solder with wetting of the termination(> 95%) Δ C/C ≤ 5% of the value measured initially Increase of tanD For C ≤ 1μF < 0.0080 For C > 1μF < 0.0050 ≥ 50% of values in ratings and characteristics of this specification
Sub-group ADD4	D		10	
A.4 Resistance to soldering heat with preheating A.4.1 Initial measurement A.4.2 Final measurement		Capacitors mounted on 1.6mm board with nonplated hole Body temp : 100℃ Bath temp : < 260℃ Dwell time : 10 s 1. Capacitance at 1kHz 2. Tangent of loss angle at 10kHz C ≤ 1μF at 1kHz C > 1μF 1. Capacitance at 1kHz		Δ C/C ≤ 5% of the value measured initially Increase of tanD For C ≤ 1μF < 0.0080 For C > 1μF < 0.0050
Sub-group ADD5	D		10	
A.5 Thermal Shock		θA = lower category temperature θB = upper category temperature 100 cycles Duration t = 30 min		ΔC/C ≤ 10% Δtanδ(1KHz) < 0.005 R_{ins} ≥ 50% specified value

Clause number and Test	D or ND	Condition	n	Performance Requirements
Sub-group ADD6	D		9	
A.6 8585 load test A3.1 Initial measurement A.3.2 Final measurement		-. 85℃, RH 85% -. 240Vac -. 1000 hours 1. Capacitance at 1kHz 2. Tangent of loss angle at 10kHz C ≤ 1μF at 1kHz C > 1μF 1. Capacitance at 1kHz 2. Tangent of loss angle at 10kHz C ≤ 1μF at 1kHz C > 1μF Insulation resistance		 Δ C/C ≤ 10% of the value measured initially Increase of tanD For C ≤ 1μF < 0.0080 For C > 1μF < 0.0050 ≥ 50% of values in ratings and characteristics of this specification

CONSTRUCTION

- Product type ; Metallized Polyester film capacitors
  - Model name ; PCX2 347 Series

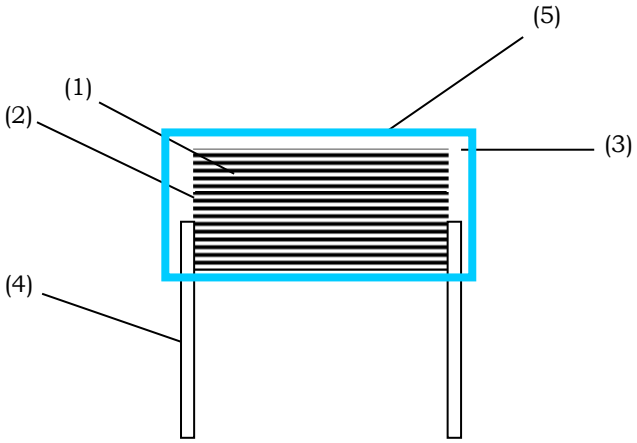

Metallized Polyester film

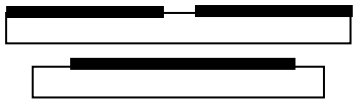

	Description	Material
1	MKT Film	Metallized polyester
2	Metal Spray	Tin-Zinc
3	Epoxy	UL94V-0
4	Lead wire	Tin plated Copper wire 0.6/0.8mm [Sn100%: 10 ㎛]
5	PP case	POLYPROPYLENE UL94-V0

Soldering conditions

- Heat resisting temperature
  MKT : 160℃ KP/MKP : 110℃

  When mounting, set the soldering temperature so that the capacitor inside peak temperature is to be lower than the given above heat resisting temperature.

- Preheating temp : Max 110℃, 1min

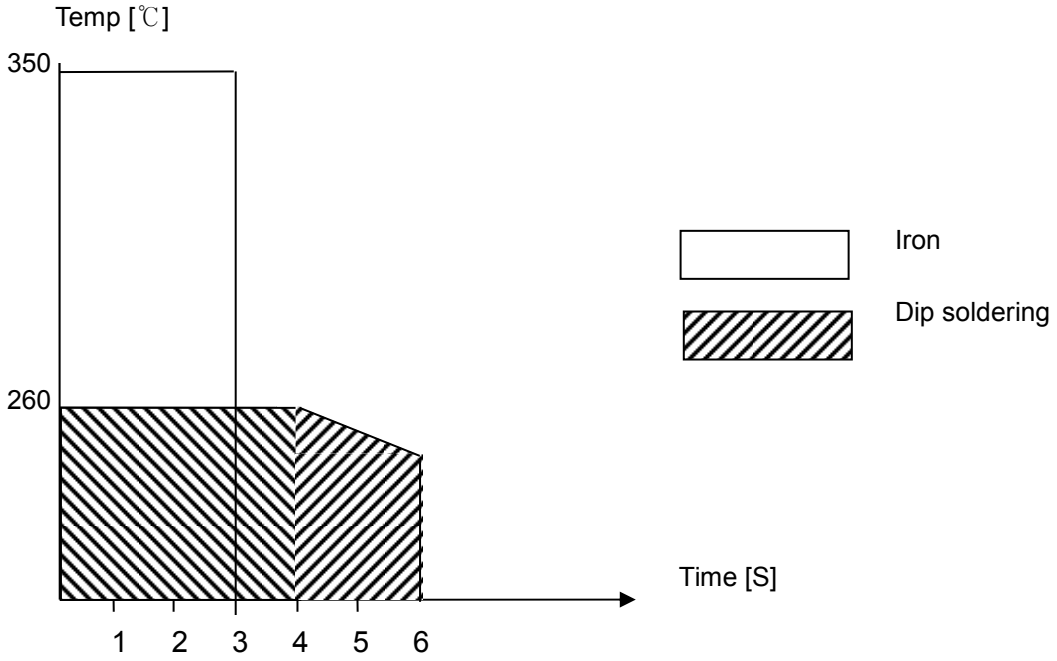

[If dipping a capacitor into solder twice, the second dipping shall be carried after the capacitor itself has returned to normal temperature]

Not passing through adhesive curing oven in order to fix the SMD parts in combination with leads parts.
- Not reflow soldering by combine the lead parts with SMD parts.

When cleaning right after soldering, make sure the capacitor surface temperature is lower than 50℃

Wave soldering profile (Recommendation)

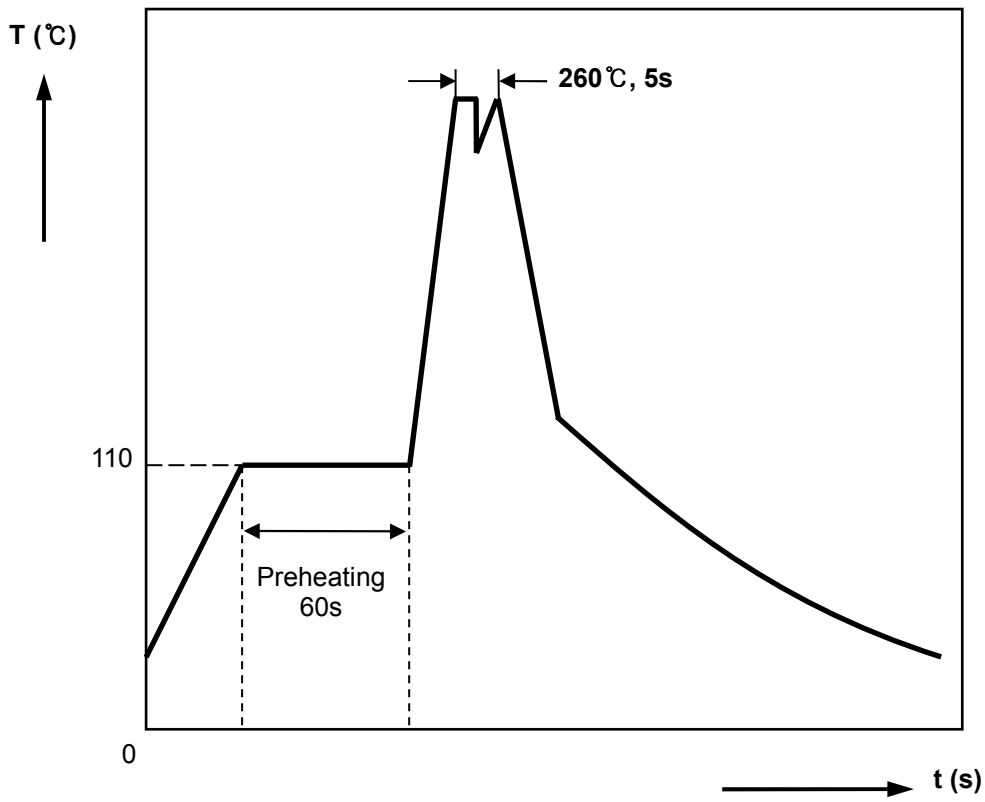

- Solder bath Temperature : 260 ℃ Max.

- Shield : Heat-absorbing board, (1.5±0.5)mm thick, between capacitor body and liquid solder

- Visual inspection : No visible damage

*** Soldering conditions**

-When mounting, set the soldering temperature so that the capacitor inside peak temperature is to be lower than the given above heat resisting temperature.

-If dipping a capacitor into solder twice, the second dipping shall be carried after the capacitor itself has returned to normal temperature.

-Not passing through adhessive curing oven in order to fix the SMD parts in combination with leads parts. Not reflow soldering by combine the lead parts with SMD parts.

-When cleaning right after soldering, make sure the capacitor surface temperature is lower than 50℃.