Product Approval Sheet

Customer : BAG

Issued no : 2018. 06. 26.
Revision no :

- Product description : EMI Suppression film capacitors
- Product code : PCX2 339S60009
- Application :

CUSTOMER			
PILKOR	Checked	Confirmed	Approved

Headquarters : 381, Woncheon-dong, Yeong tong-gu, Suwon-si, Gyeonggi-do, Korea
PILKOR Electronics Division (of COWELL Fashion Co., Ltd.)
TEL. +82-31-217-2500 FAX. +82-31-217-7465

China factory : No 25 Zoutai South Road Rongcheng City, Shandong Province China
Rongcheng PILKOR Electronics Co., Ltd.
TEL. +86-631-755-6001~3 FAX, +86-631-755-6004

* Please send it back to us before placing order.

목 차 *(Contents)*

Safety

1. 일 반 ***Page 1***

(General)

2. 특 성 곡 선 ***Page 7***

(Characteristics)

3. 인 쇄 및 포 장 ***Page 8***

(Mark & Packing)

4. 신 뢰 성 시 험 ***Page 13***

(Test Requirements)

**** Construction***

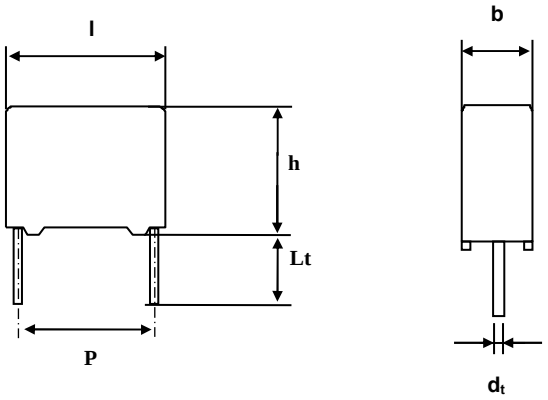

dt = 0.8+0.08/- 0.05 mm

Voltage V~	Cap. µF	Code PCX2 339	C-tol.	Dimensions b × h × l mm	P mm	Lt mm
305	0.23	S60009	± 5 %	7.0 x 13.5 x 18.0	15.0± 0.4	30.0 min.

< BUT >

- ***Capacitance : 0.23uF***

- ***Tolerance : ± 5%***

- ***Lt = 30.0mm min.***

- ***Packing Method (LOOSE IN BOX)***

Packing method	**SPQ (Inner box)**	**PQ (Outer box)**
8242 450 40025	1000 (8242 451 30201)	4000 (8242 451 30291)

EMI Suppression Film capacitors

Safety

PCX2 339x6 (Mini)

MKP RADIAL POTTED CAPACITORS **Pitch 10.0/15.0/22.5/27.5mm**

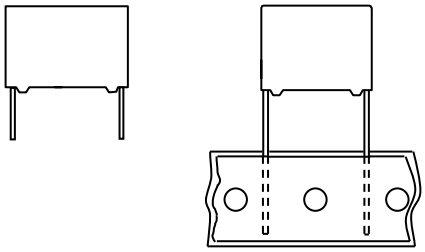

10 and 15mm

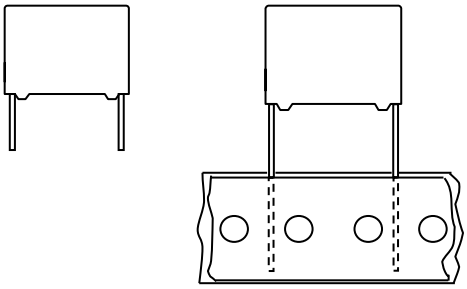

22.5 and 27.5mm

QUICK REFERENCE DATA

Capacitance range (E6 series) *	0.001μF to 3.3μF
Capacitance tolerance	± 10 %, ± 20 %
Rated (AC) voltage 50 to 60 Hz	305 V~
Climatic category	55/110/21
Temperature range	-55℃ ~ +110℃
Reference IEC specification	IEC 60384-14(3rd edition) and EN 60384-14
Safety approvals	UL60384-14 & CSA E60384-14:09(cUL), ENEC, EK, CQC
Potting & Encapsulation material	Qualified in accordance with UL 94V-0
Safety class	X2

* Intermediate values of the E12 series are available to special order

FEATURES	APPLICATIONS
. 10 to 27.5 mm lead pitch . Supplied loose in box and taped on reel . Consist of a low-inductive wound cell of Metallized (PP) film . potted in a flame retardant case	. For X2-electromagnetic interference suppression . Specially designed to meet the NEW REQUIREMENTS of new IEC 60384-14 Specification(3rd edition)/ EN 60384-14/UL60384-14 requiring a 2.5kV peak pulse voltage test . Not for use in series with the mains

● Please refer to caution and warning at http://www.pilkor.co.kr/download/Introductions.pdf before using these products.

Ordering Information

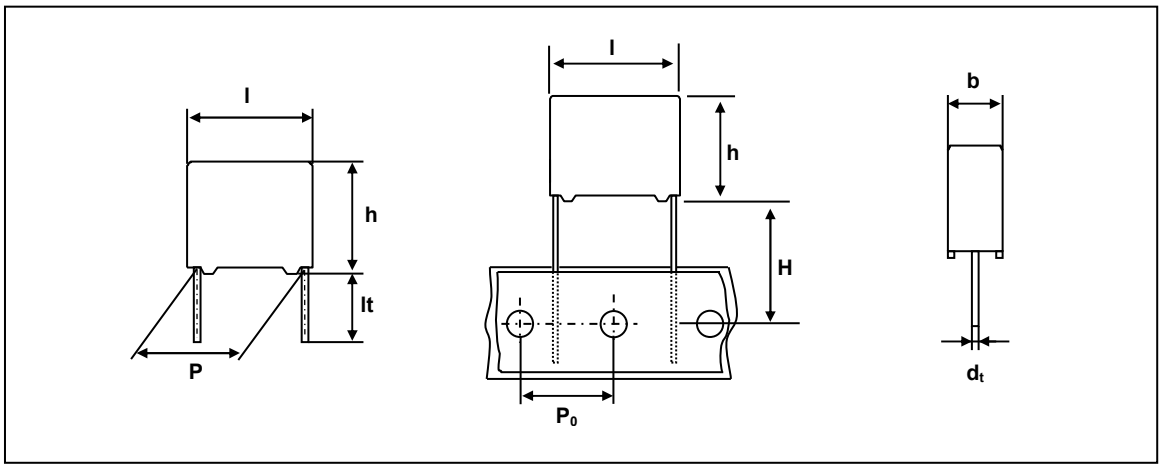

PCX2 339 X X X XXX

Capacitance

Code	Version & Voltage
6	Mini-Cp / 305V
F	Low h-Cp / 305V

Code	Original pitch
D	10.0 mm
F	15.0 mm
J	22.5 mm
L	27.5 mm

Available versions					Product (l_{max})			
Code	Packing method	C – tol.	Lead length & Height	Hole to hole (P_o)	12.5	18.0	26.0	31.0
					Pitch (P)			
0	Loose in box	±20%	lt = 5.0±1.0mm	-	10.0	15.0	22.5	27.5
1	Loose in box	±10%	lt = 5.0±1.0mm	-	10.0	15.0	22.5	27.5
4	Loose in box	±20%	lt =25.0±2.0mm	-	10.0	15.0	22.5	27.5
5	Loose in box	±10%	lt =25.0±2.0mm	-	10.0	15.0	22.5	27.5
6	Ammopack	±20%	H = 18.5mm*	12.7mm	10.0	15.0	22.5	27.5
7	Ammopack	±10%	H = 18.5mm*	12.7mm	10.0	15.0	22.5	27.5

* H ; intape height ; for detailed specifications refer to chapter PACKAGING
** Some values is not following the coding rule.

SAFETY APPROVALS

SAFETY APPROVALS	Voltage	Value	File Number
UL 60384-14 & CSA E60384-14:09(cUL)	305V(AC)	1nF to 3.3μF	E165646
ENEC(SEMKO) *	305V(AC)	1nF to 3.3μF	SE/0256-4
EK	305V(AC)	C ≤ 0.1μF 0.1μF < C ≤ 0.33μF 0.33μF < C ≤ 1.0μF 1.0μF < C ≤ 3.0μF	SH03001-9001 SH03001-8001 SH03001-13001 SH03001-13002
CQC	305V(AC)	1nF to 3.3μF	CQC08001023138

* The ENEC-approval together with the CB-Certificate replace all national approval marks of the following countries(they have already signed the ENEC-Agreement): Austria; Belgium; Czech. Republic; Denmark; Finland; France; Germany; Greece; Hungary; Ireland; Italy; Luxembourg; Netherlands; Norway; Portugal; Slovenian; Spain; Sweden; Switzerland and United Kingdom

Packaging Information

SMALLEST PACKING QUANTITIES (SPQ)	LOOSE IN BOX	
DIMENSIONS	lt = 5.0 ± 1.0 mm	lt = 25 ± 2.0 mm
4.0 x 10.0 x 12.5	2000	1200
5.0 x 11.0 x 12.5	1500	1000
6.0 x 12.0 x 12.5	1000	1000
5.0 x 11.0 x 18.0	1000	1000
6.0 x 12.0 x 18.0	1000	1000
7.0 x 13.5 x 18.0	1000	1000
8.5 x 13.5 x 18.0	1000	1000
8.5 x 15.0 x 18.0	1000	1000
10.0 x 16.5 x 18.0	1000	1000
11.0 x 18.5 x 18.0	1000	1000
6.0 x 15.5 x 26.0	1000	1000
7.0 x 16.5 x 26.0	1000	1000
8.5 x 18.0 x 26.0	500	500
10.0 x 19.5 x 26.0	500	500
11.5 x 21.0 x 26.0	500	500
13.0 x 23.0 x 26.0	500	500
17.0 x 22.0 x 26.0	250	250
9.0 x 18.0 x 31.0	500	500
11.0 x 21.0 x 31.0	500	250
13.0 x 23.0 x 31.0	250	250
15.0 x 25.0 x 31.0	250	250
18.0 x 28.0 x 31.0	200	200

SPECIFIC REFERENCE DATA FOR 305 V_{AC}

Tangent of loss angle	at 1 khz	at 10 khz
C ≤ 470 nF 470 nF < C ≤ 1 µF C > 1 µF	≤ 10 x 10^{-4} ≤ 20 x 10^{-4} ≤ 30 x 10^{-4}	≤ 20 x 10^{-4} ≤ 70 x 10^{-4} -
Rated voltage pulse slope $(dV/dt)_R$ P = 10.0mm P = 15.0mm P = 22.5mm P = 27.5mm	400 V/µs 300 V/µs 150 V/µs 100 V/µs	
R between leads, for C ≤ 0.33 µF	〉 15 000 MΩ	
RC between leads, for C > 0.33 µF	〉 5 000 s	
Withstanding(DC) Voltage (cut-off current 10mA) C ≤ 1 µF C > 1 µF	2250 V 1min 1850 V 1min	
Withstanding(AC) Voltage between leads and case	2400V 1min	

V_{Rac} = 305 V~ X2 **loose and taped**

Cap. (µF)	b x h x l (mm)	MASS (g)	CATALOGUE NUMBER PCX2 339 ..... loose in box			
			lt = 5 ± 1.0 mm		lt = 25 ± 2.0 mm	
			C – tol. ± 20 %	C – tol. ± 10 %	C – tol. ± 20 %	C – tol. ± 10 %
Pitch = 10.0 ± 0.4 mm dt = 0.6 +0.06/-0.05 mm						
0.001	4.0 x 10.0x 12.5	0.8	D60102	D61102	D64102	D65102
0.0015	4.0 x 10.0x 12.5	0.8	D60152	D61152	D64152	D65152
0.0022	4.0 x 10.0x 12.5	0.8	D60222	D61222	D64222	D65222
0.0033	4.0 x 10.0x 12.5	0.8	D60332	D61332	D64332	D65332
0.0047	4.0 x 10.0x 12.5	0.8	D60472	D61472	D64472	D65472
0.0068	4.0 x 10.0x 12.5	0.8	D60682	D61682	D64682	D65682
0.01	4.0 x 10.0x 12.5	0.8	D60103	D61103	D64103	D65103
0.015	4.0 x 10.0x 12.5	0.8	D60153	D61153	D64153	D65153
0.022	4.0 x 10.0x 12.5	0.8	D60223	D61223	D64223	D65223
0.033	5.0 x 11.0 x 12.5	0.9	D60333	D61333	D64333	D65333
0.047	5.0 x 11.0 x 12.5	0.9	D60473	D61473	D64473	D65473
0.068	6.0 x 12.0 x 12.5	1.0	D60683	D61683	D64683	D65683
0.1	6.0 x 12.0 x 12.5	1.0	D60104	D61104	D64104	D65104
0.15	6.0 x 12.0 x 12.5	1.0	D60154	D61154	D64154	D65154

V_{Rac} = 305 V~ X2

loose and taped

Cap. (µF)	b x h x l (mm)	MASS (g)	CATALOGUE NUMBER PCX2 339 ..... loose in box			
			lt = 5 ± 1.0 mm		lt = 25 ± 2.0 mm	
			C – tol. ± 20 %	C – tol. ± 10 %	C – tol. ± 20 %	C – tol. ± 10 %
Pitch = 15.0 ± 0.4 mm dt = 0.6 +0.06/-0.05 mm						
0.01	5.0 x 11.0 x 18.0	1.6	F60103	F61103	F64103	F65103
0.015	5.0 x 11.0 x 18.0	1.6	F60153	F61153	F64153	F65153
0.022	5.0 x 11.0 x 18.0	1.6	F60223	F61223	F64223	F65223
0.033	5.0 x 11.0 x 18.0	1.6	F60333	F61333	F64333	F65333
0.047	5.0 x 11.0 x 18.0	1.6	F60473	F61473	F64473	F65473
0.068	5.0 x 11.0 x 18.0	1.6	F60683	F61683	F64683	F65683
0.1	5.0 x 11.0 x 18.0	1.6	F60104	F61104	F64104	F65104
0.15	6.0 x 12.0 x 18.0	1.7	F60154	F61154	F64154	F65154
Pitch = 15.0 ± 0.4 mm dt = 0.8 +0.08/-0.05 mm						
0.22	7.0 x 13.5 x 18.0	1.9	F60224	F61224	F64224	F65224
0.33	8.5 x 13.5 x 18.0	2.4	FF0334	FF1334	FF4334	FF5334
0.33	8.5 x 15.0 x 18.0	2.6	F60334	F61334	F64334	F65334
0.47	10.0 x 16.5 x 18.0	3.1	F60474	F61474	F64474	F65474
0.68	11.0 x 18.5 x 18.0	4.1	F60684	F61684	F64684	F65684
Pitch = 22.5 ± 0.4 mm dt = 0.8 +0.08/-0.05 mm						
0.22	6.0 x 15.5 x 26.0	3.0	J60224	J61224	J64224	J65224
0.33	6.0 x 15.5 x 26.0	3.0	J60334	J61334	J64334	J65334
0.47	7.0 x 16.5 x 26.0	3.5	J60474	J61474	J64474	J65474
0.68	8.5 x 18.0 x 26.0	4.4	J60684	J61684	J64684	J65684
1.0	10.0 x 19.5 x 26.0	5.5	J60105	-	J64105	-
1.0	11.5 x 21.0 x 26.0	6.5	-	J61105	-	J65105
1.5	13.0 x 23.0 x 26.0	8.0	J60155	J61155	J64155	J65155
2.2	16.5 x 22.0 x 26.0	10.0	JF0225	JF1225	JF4225	JF5225
Pitch = 27.5 ± 0.4 mm dt = 0.8 +0.08/-0.05 mm						
0.68	9.0 x 19.0 x 31.0	5.5	L60684	L61684	L64684	L65684
1.0	11.0 x 21.0 x 31.0	7.8	L60105	L61105	L64105	L65105
1.5	13.0 x 23.0 x 31.0	10.4	L60155	L61155	L64155	L65155
2.2	15.0 x 25.0 x 31.0	12.8	L60225	L61225	L64225	L65225
3.3	18.0 x 28.0 x 31.0	17.2	L60335	L61335	L64335	L65335

MOUNTING

NORMAL USE

The capacitors are designed for mounting on printed-circuit boards.
The capacitors packed in bandoliers are designed for mounting on printed-circuit boards by means of automatic insertion machines.
For detailed specifications refer to chapter "PACKAGING".

SPECIFIC METHOD OF MOUNTING TO WITHSTAND VIBRATION AND SHOCK

In order to withstand vibration and shock tests, it must be ensured that the stand-off pips are in good contact with the printed-circuit board.

. For pitches of 15mm the capacitors shall be mechanically fixed by leads.
. For larger pitches the capacitors shall be mounted in the same way and the body clamped.

SPACE REQUIREMENTS ON PRINTED-CIRCUIT BOARD

The maximum length and width of film capacitors are shown in the following drawing ;

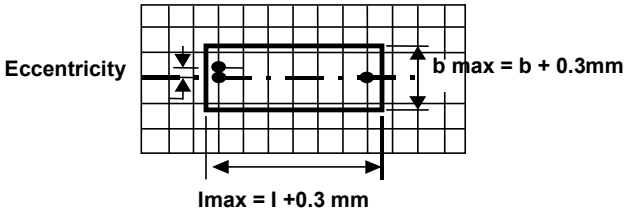

- Eccentricity as in drawing.
  The maximum eccentricity is smaller than or equal to the lead diameter of the product concerned.

- Product height with seating plane as given by IEC 60717 as reference : $h_{max} \leq$ h+0.3mm

STORAGE TEMPERATURE

. Storage temperature : T_{stg} = -25 to +40 °C with RH maximum 80% without condensation.

RATINGS AND CHARACTERISTICS

Unless otherwise specified all electrical values apply to an ambient temperature of 23± 1℃, an atmospheric pressure of 86 to 106kPa and a relative humidity 50± 2%.

For reference testing, a conditioning period shall be applied of 96± 4 hours by heating the products in a circulating air oven at the rated temperature and a relative humidity not exceeding 20%.

Maximum RMS Voltage as a function of frequency

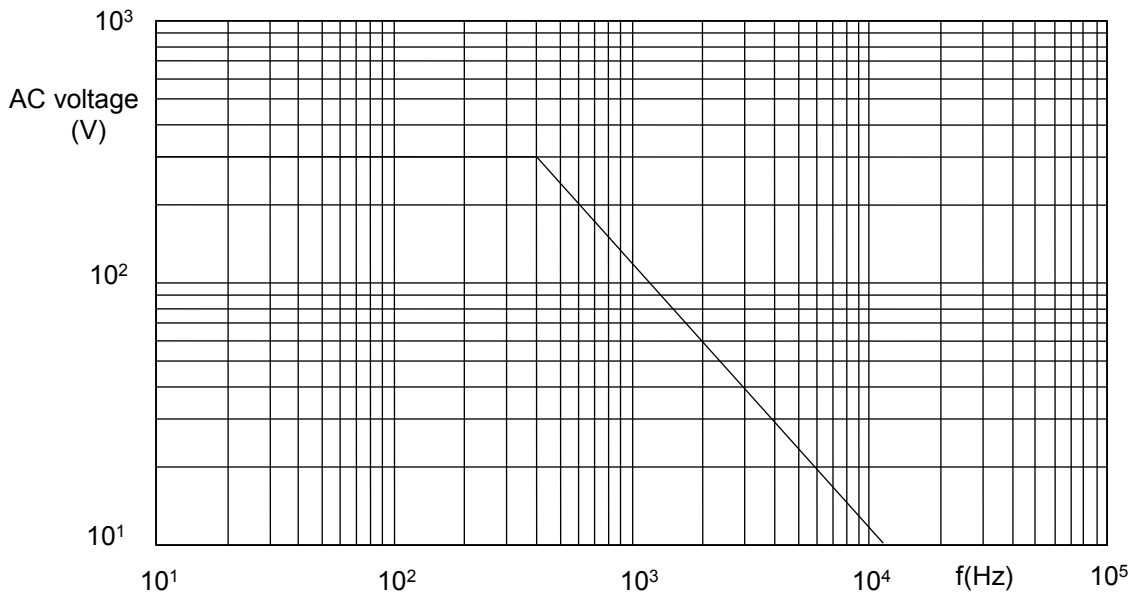

AC voltage (RMS value) as a function of frequency at Tamb ≤ 110℃

PRODUCT MARKING

Capacitors are marked with having following information;

1.Manufacturer (PILKOR)
2.Manufacturer's type designation (PCX2 339)
3.Rated capacitance in code according to IEC 60062
4.Rated (AC) voltage (305V~)
5.Sub class (X2)
6.Tolerance on rated capacitance M =± 20 % K = ± 10 %
7.Climatic category (55/110/21)
8.Code for dielectric material (MKP)
9.Year and week of manufacturing (e.g. 1301)
10.Safety approvals
* white or black color

Example of marking

Marking on the side

or

Marking on the side

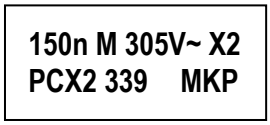

Marking on the top

Marking on the side

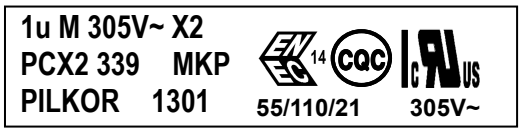

Marking on headface

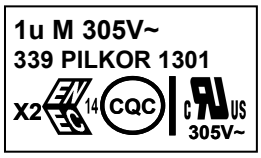

Marking on the top

PACKAGE MARKING

The package containing the capacitors in marking as shown.

For C ≤ 3uF

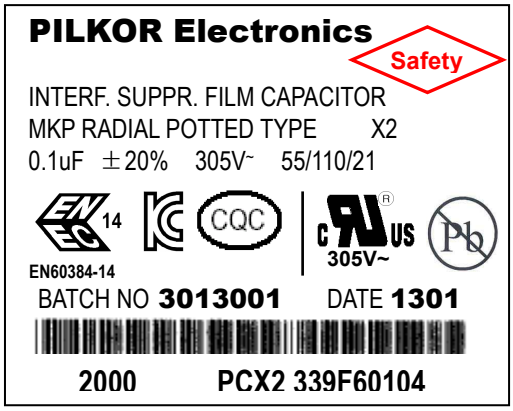

For 3uF < C ≤ 3.3uF

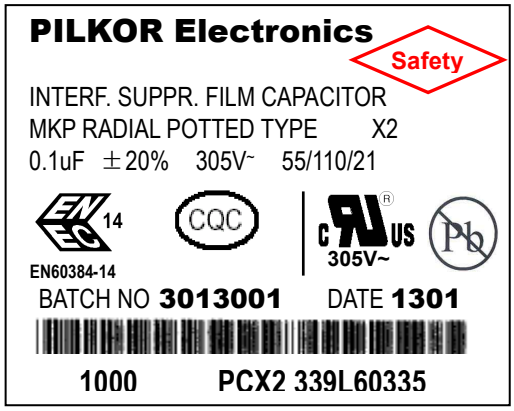

1 Manufacturer's name
2 Sub-family
3 Type description, safety class X2, Series name
4 Capacitance value, tolerance, voltage
  and climatic category (IEC)
5 Safety approvals
6 Batch nr. & production period year
  and week code
7 Quantity and Product code (12NC)

*** Color of label : Pink

Color of Safety Marking : Red

PACKAGING

DIMENSIONS OF TAPED PRODCUTS
TAPED ON REEL

Capacitor with terminal pitch P = 10 mm

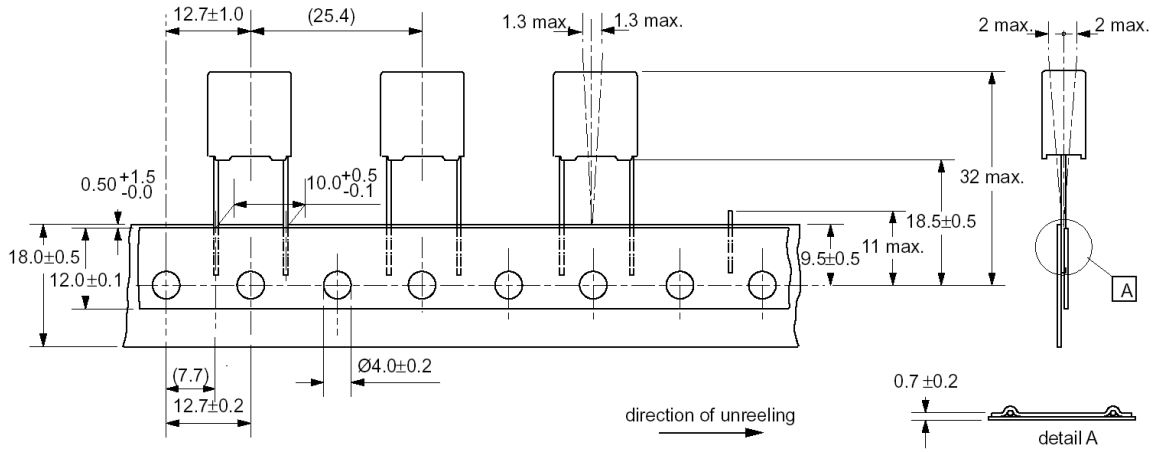

Capacitor with terminal pitch P = 15 mm.

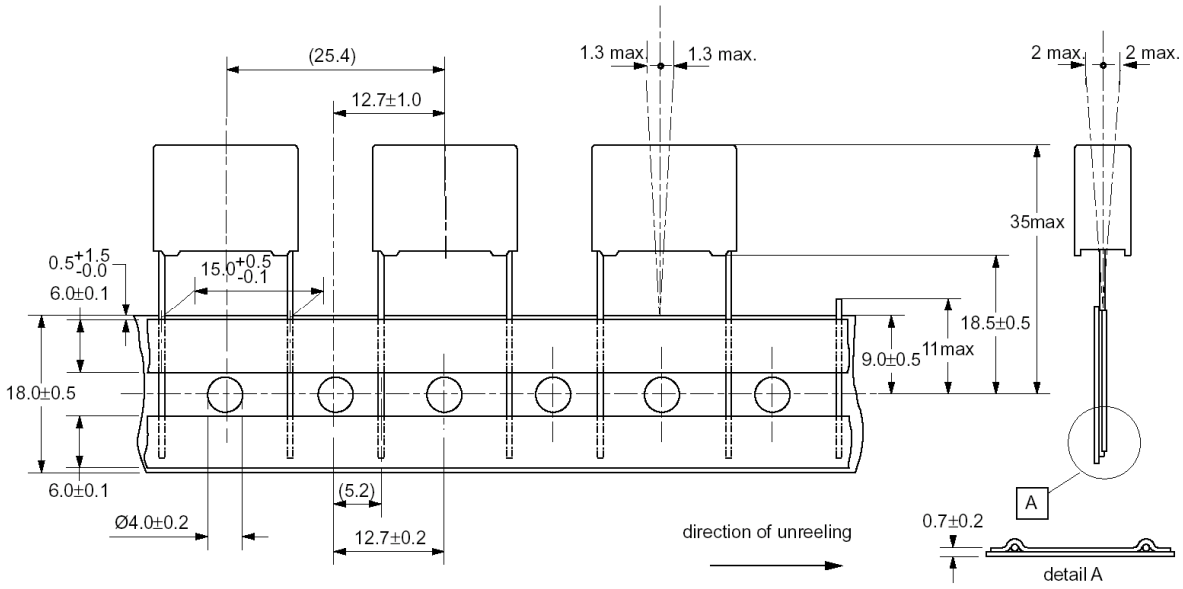

Capacitor with terminal pitch P = 22.5 or 27.5 mm

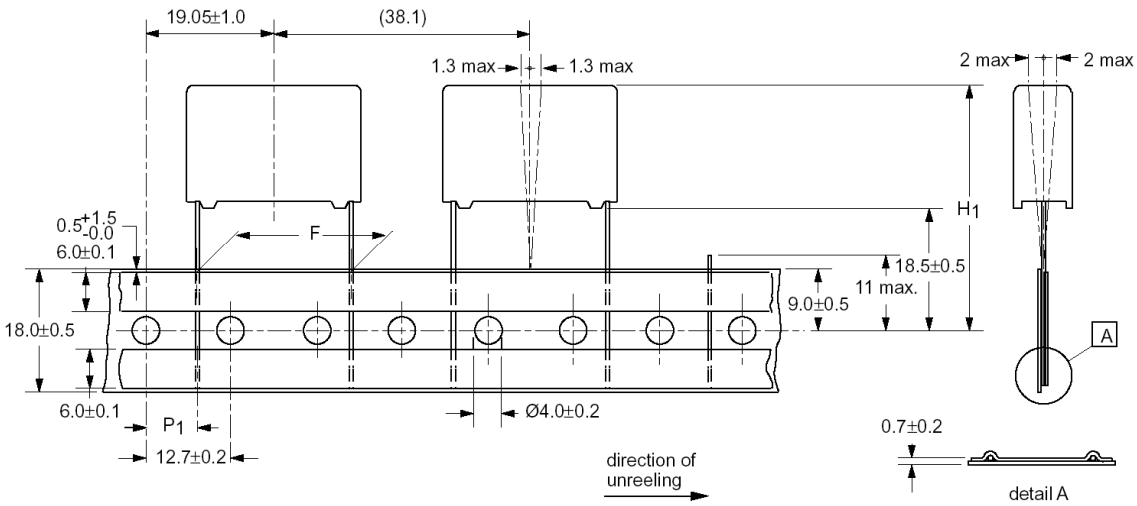

ITEM	SYMBOL	VALUE	VALUE	TOLERANCE
LEAD TO LEAD DISTANCE(mm)	F	22.5	27.5	+0.5/-0.1
HEIGHT OF COMPONENT FROM TAPE CENTER TO SEATING PLANE(mm)	H	18.5		0.5
COMPONENT HEIGHT FROM TAPE CENTER(mm)	H_1	40 max	48 max	
FEED HOLE TO LEAD CENTER(mm)	P_1	7.8	5.33	0.7

CHARACTERRISTICS OF TAPED PRODCUTS

Cumulative pitch error 1.0mm/20 pitches

Pull-out force of the component	≥	**5 N**
Pull-out force of the adhesive tape	≥	**6 N**
Tearing force of tape	≥	**15 N**
Storage temperature		**- 25 to + 40 ℃**
Relative humidity		**max. 80% without condensation**

The max. number of empty places per reel shall not exceed 0.5% of the total number of components per reel, but no more than 2 consecutive positions may be vacant.

Outlines of reel & ammo packing (dimensions in mm)

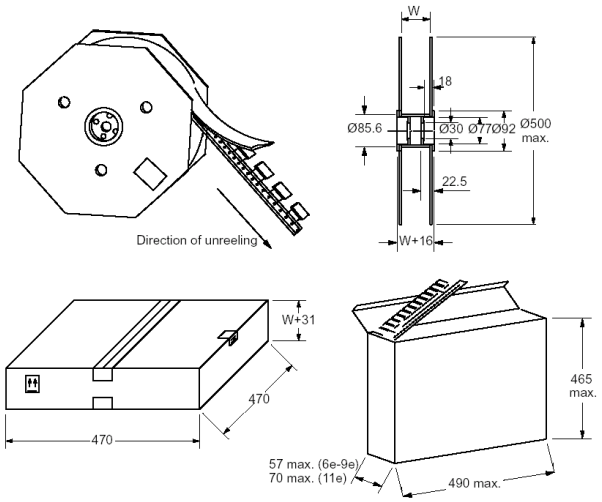

W as function of product dimensions

l = 12.5 or 18.0 mm		l = 26 or 31 mm	
b (mm)	W 2 (mm)	b (mm)	W 2 (mm)
4.0	40	6.0	50
5.0	45	7.0	50
6.0	45	8.5	50
7.0	45	9.0	50
8.5	45	10.0	50
10.0	50	11.0	55
		13.0	55
		15.0	60
		18.0	60

INSPECTION REQUIREMENTS

Note 1 : Sub-clause numbers of tests and performance requirements refer to the Sectional Specification, IEC 384-14 and Section One this specification.
Note 2 : Inspection levels are selected from IEC-Publication 410: Sampling Plans and Procedures for inspection by attributes.
Note 3 : In this table :
p = periodicity in months
n = sample size
D = destructive
ND = non-destructive
IL = inspection level) IEC 410
AQL = acceptance quality level)

Note 4 : For this capacitors, considered as a solid construction, the periodicity of the vibration and shock test is reduced from 36 months to 6 months.

Clause number and Test	D or ND	Condition	IL	n	Performance Requirements
Group A inspection (lot by lot)					
Sub-Group A1	ND				
4.1 Visual examination		Detail	S4	1)	No visual damage , legible marking and as specified in Marking specification
4.1 Dimensions 2)			S3	1)	As specified in dimension table of this specification
Sub-Group A2 3)	ND				
4.2.2 capacitance		At 1kHz			Within specified tolerance
4.2.3 Tangent of loss angle		At 10kHz C ≤ 1µF At 1kHz C > 1µF			As in rating and characteristics of this specification
4.2.1 Voltage proof (test A)		1. C ≤ 1µF 2250V 1min 2. C > 1µF 1850V 1min			No permanent breakdown (cut-off current 10mA) or flash over Self-healing allowed
4.2.5 Insulation resistance (test A)		At 100V 1min.			As in rating and characteristics of this specification

1) Number to be tested : Sample size as directly allotted to the code letter for IL in Table 2A of IEC 410 (Single sampling plan for normal inspection)
The acceptance number complies with AQL value : 0.65 %

2) This test may be replaced by in-production testing, if SPC on dimensional measurements or other mechanisms to avoid parts exceeding the limits is installed.

3) The 100% End-of-line testing is followed by re-inspection by sampling in order to monitor outgoing quality level by defectives per million (DPM). The sampling level and the calculation of DPM values is in accordance with CECC 00 014, counting any parametric failure as a defective. In case one or more defectives occur in a lot, this lot shall be rejected.

Clause number and Test	D or ND	Condition	n	Performance Requirements
Group C inspection (periodic)			6	
Sub-group C1A Part of a sample of sub-group C1	D			
4.1 dimension (detail)				As specified in dimension table of this specification
4.3.1 initial measurement		1. Capacitance at 1kHz 2. Tangent of loss angle at 10kHz C ≤ 1μF at 1kHz C > 1μF		
4.3 robustness of terminations		Tensile and bending		No visible damage
4.4 resistance to soldering heat		Method : 1A Solder bath : 260℃ Duration : 10 s		
4.14 component solvent resistance		Isopropylalcohol at room temperature Method : 2 Immersion time : 5± 0.5min Recovery time: min 1hour max 2hours		
4.4.2 final measurements		Visual examination		No visible damage Legible marking
		1. Capacitance at 1kHz		△C/C ≤ 5% of the value measured initially
		2. Tangent of loss angle at 10kHz C ≤ 1μF at 1kHz C > 1μF		Increase of tanD For C ≤ 1μF < 0.0080 For C > 1μF < 0.0050
		Insulation resistance		As in rating and characteristics of this specification

Clause number and Test	D or ND	Condition	n	Performance Requirements
Group C inspection (periodic)				
Sub-group C1B Other part of a sample of sub-group C1	D		12	
4.6.1 initial measurement		1. Capacitance at 1kHz 2. Tangent of loss angle at 10kHz C ≤ 1μF at 1kHz C > 1μF		
4.6 rapid change of temperature		⊖ A = lower category temperature ⊖ B = upper category temperature 5 cycles duration time : 30 min		
4.7 vibration (see note 4)		Method of mounting : see the mounting of this specification Procedure : B4 Frequency range 10Hz to 55Hz amplitude : 0.75mm or acceleration 98m/s^2(which is less severe) Total duration : 6 hours		
4.7.2 final examination		Visual examination		No visible damage
4.9 shock (see note 4)		Method of mounting : see the mounting of this specification Pulse shape : half sine Acceleration : 490 m/s^2 Duration of pulse : 11ms		
4.9.3 final measurements		Visual examination 1. Capacitance at 1kHz 2. Tangent of loss angle at 10kHz C ≤ 1μF at 1kHz C > 1μF Insulation resistance		No visible damage Δ C/C ≤ 5% of the value measured initially Increase of tanD For C ≤ 1μF < 0.0080 For C > 1μF < 0.0050 As in rating and characteristics of this specification

Clause number and Test	D or ND	Condition	n	Performance Requirements
Group C inspection (periodic)				
Sub-group C1 Combined sample of specimens of sub-groups C1A and C1B	D		18	
4.11 climatic sequence 4.11.2 dry heat 4.11.3 damp heat cyclic test Db, first cycle 4.11.4 cold 4.11.6 damp heat cyclic test Db, remaining cycle 4.11.6.2 final measurements		 $T = T_{upper\text{-}category\ temperature}$ Duration : 16 hours $T = T_{lower\text{-}category\ temperature}$ Duration : 2 hours Visual examination 1. Capacitance at 1kHz 2. Tangent of loss angle at 10kHz C ≤ 1μF at 1kHz C > 1μF Insulation resistance Voltage proof 1350V (DC) for 1min		 No visible damage Legible marking Δ C/C ≤ 5% of the value measured initially Increase of tanD For C ≤ 1μF < 0.0080 For C > 1μF < 0.0050 ≥ 50% of values in ratings and characteristics of this specification No permanent breakdown or flash over

Clause number and Test	D or ND	Condition	n	Performance Requirements
Sub-group C2	D		10	
4.12 damp heat steady state		21 days, 40℃ 90 – 95% R.H		
4.12.1 initial measurements		1. Capacitance at 1kHz 2. Tangent of loss angle at 10kHz C ≤ 1μF at 1kHz C > 1μF		
4.12.3 final measurements		Visual examination		No visible damage Legible marking
		1. Capacitance at 1kHz		△ C/C ≤ 5% of the value measured initially
		2. Tangent of loss angle at 10kHz C ≤ 1μF at 1kHz C > 1μF		Increase of tanD For C ≤ 1μF < 0.0080 For C > 1μF < 0.0050
		Voltage proof 1350V (d.c) 1min		No permanent breakdown or flash over
		Insulation resistance		≥ 50% of values in ratings and characteristics of this specification

Clause number and Test	D or ND	Condition	n	Performance Requirements
Sub-group C3	D		12	
4.13.1 initial measurements		1. Capacitance at 1kHz 2. Tangent of loss angle at 10kHz C ≤ 1μF at 1kHz C > 1μF		
4.13 peak impulse voltage		3 successive impulse, full wave, peak voltage : for C ≤ 1μF : 2.5kV for C > 1μF : 2.5kV/√ C (C in μF) max : 24 pulses		No selfhealing breakdown or flashover
4.14 endurance test		Duration : 1000 hours 1.25 x V_{Rac} at 110℃ once in every hour the voltage is increased to 1000V(RMS) for 0.1 s via a resistor of 47Ω ± 5% 47ohm should be located outside of oven or 47ohm's location in oven should be selected that heat generation of 47ohm is not to influence the capacitor's temperature.		
4.12.3 final measurements		Visual examination 1. Capacitance at 1kHz 2. Tangent of loss angle at 10kHz C ≤ 1μF at 1kHz C > 1μF Insulation resistance Voltage proof 1350V (DC) for 1 min		No visible damage Legible marking Δ C/C ≤ 10% of the value measured initially Increase of tanD For C ≤ 1μF < 0.0080 For C > 1μF < 0.0050 ≥ 50% of values in ratings and characteristics of this specification No permanent breakdown or flashover

Clause number and Test	D or ND	Condition	n	Performance Requirements
Sub-group C4	D		6	
4.15.1 initial measurements		1. Capacitance at 1kHz 2. Tangent of loss angle at 10kHz C ≤ 1μF at 1kHz C > 1μF		
4.15 charge and discharge		10000 cycles : charge to U_R half sine wave Duration : 5ms Discharge resistance $R = \frac{V_{RAC} \times \sqrt{2}}{1.5 \times C \times (dU/dt)}$ with a minimum : 2.2Ω		
4.15.3 final measurements		1. Capacitance at 1kHz 2. Tangent of loss angle at 10kHz C ≤ 1μF at 1kHz C > 1μF Insulation resistance		Δ C/C ≤ 10% of the value measured initially Increase of tanD For C ≤ 1μF < 0.0080 For C > 1μF < 0.0050 ≥ 50% of values in ratings and characteristics of this specification

<table>
<tr><th>Clause number and Test</th><th>D or ND</th><th>Condition</th><th>n</th><th>Performance Requirements</th></tr>
<tr><td>Sub-group C6</td><td>D</td><td></td><td>18</td><td></td></tr>
<tr><td>4.17 passive flammability</td><td></td><td>Bore of gas jet : ϕ 0.5 mm
Fuel : Butane
Test duration for actual volume V in mm^3

class C

<table>
<tr><th>Volume(mm^3)</th><th>Gas jet</th></tr>
<tr><td>V ≤ 250</td><td>5s</td></tr>
<tr><td>250 〈 V ≤ 500</td><td>10s</td></tr>
<tr><td>500 〈 V ≤ 1750</td><td>20s</td></tr>
<tr><td>V ＞1750</td><td>30s</td></tr>
</table>

One flame application
 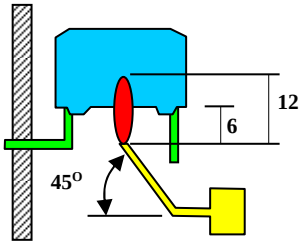
</td><td></td><td>1.class C
After removing test flame from capacitor, the capacitor must not continue burn for more than 30 s.

2.No burning particle must drop from the sample</td></tr>
<tr><td>Sub-group C7</td><td>D</td><td></td><td>24</td><td></td></tr>
<tr><td>4.18 active flammability</td><td></td><td>20 discharges of a 3 uF tankcapacitor across the test capacitor. The test capacitor during the discharges connected to V_R (16A). V_R is maintained for 2 min after the last discharge</td><td></td><td>The cheese cloth around the capacitor shall not burn with a flame. Not electrical measurements are required.</td></tr>
</table>

Clause number and Test	D or ND	Condition	n	Performance Requirements
Sub-group ADD1	D		10	
A.1 Solder ability Solvent resistance of the marking		Without aging Method : 1 Non-activated colophiny flux 501 Solder bath : 245℃ Dwell time : 3s Isopropylalcohol at room temperature. Method : 1 Rubbing material cotton wool Immersion time : 5± 0.5min		Good tinning as evidenced by free flowing of the solder with wetting of the termination(> 95%) Legible marking
Sub-group ADD2	D		12	
A.2 Heat storage A.2.1 Initial measurement A.2.2 Final measurement		Duration : 1000h Temperature : upper category temperature 1. Capacitance at 1kHz 2. Tangent of loss angle at 10kHz C ≤ 1μF at 1kHz C > 1μF 1. Capacitance at 1kHz 2. Tangent of loss angle at 10kHz C ≤ 1μF at 1kHz C > 1μF Insulation resistance		 △ C/C ≤ 5% of the value measured initially Increase of tanD For C ≤ 1μF < 0.0080 For C > 1μF < 0.0050 As in Rating and CHARACTERISTICS of this specification

Clause number and Test	D or ND	Condition	n	Performance Requirements
Sub-group ADD3	D		9	
A.3 Detergent resistance A3.1 Initial measurement A.3.2 Final measurement		Density 20g/L dishwasher detergergent Temperature 70℃ during 3 minutes followed by rinsing in clear water for 1 minute Recovery time : 1 to 2 hours 1. Capacitance at 1kHz 2. Tangent of loss angle at 10kHz C ≤ 1μF at 1kHz C > 1μF 1. Capacitance at 1kHz 2. Tangent of loss angle at 10kHz C ≤ 1μF at 1kHz C > 1μF Insulation resistance		Good tinning as evidenced by free flowing of the solder with wetting of the termination(> 95%) Δ C/C ≤ 5% of the value measured initially Increase of tanD For C ≤ 1μF < 0.0080 For C > 1μF < 0.0050 ≥ 50% of values in ratings and characteristics of this specification
Sub-group ADD4	D		10	
A.4 Resistance to soldering heat with preheating A.4.1 Initial measurement A.4.2 Final measurement		Capacitors mounted on 1.6mm board with nonplated hole Body temp : 100℃ Bath temp : < 260℃ Dwell time : 10 s 1. Capacitance at 1kHz 2. Tangent of loss angle at 10kHz C ≤ 1μF at 1kHz C > 1μF 1. Capacitance at 1kHz `		 Δ C/C ≤ 5% of the value measured initially Increase of tanD For C ≤ 1μF < 0.0080 For C > 1μF < 0.0050
Sub-group ADD5	D		10	
A.5 Thermal Shock		θA = lower category temperature θB = upper category temperature 100 cycles Duration t = 30 min		ΔC/C ≤ 10% Δtanδ(1KHz) < 0.005 R_{ins} ≥ 50% specified value

CONSTRUCTION

- Product type ; Metallized Polypropylene film capacitors
- Model name ; PCX2 Series

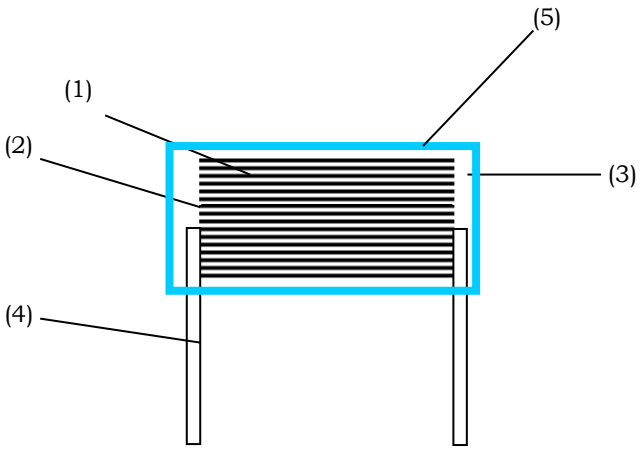

Pb e3

Metallized Polypropylene film

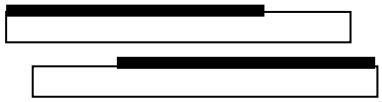

	Description	Material
1	MKP Film	Metallized polypropylene
2	Metal Spray	Tin-Zinc
3	Epoxy	UL94V-0
4	Lead wire	Tin plated Cp steel wire 0.6/0.8mm [Sn100%: 10 ㎛]
5	PP case	POLYPROPYLENE UL94-V0

Soldering conditions

- Heat resisting temperature
  MKT : 160℃ KP/MKP : 110℃

  When mounting, set the soldering temperature so that the capacitor inside peak temperature is to be lower than the given above heat resisting temperature.

- Preheating temp : Max 110℃, 1min

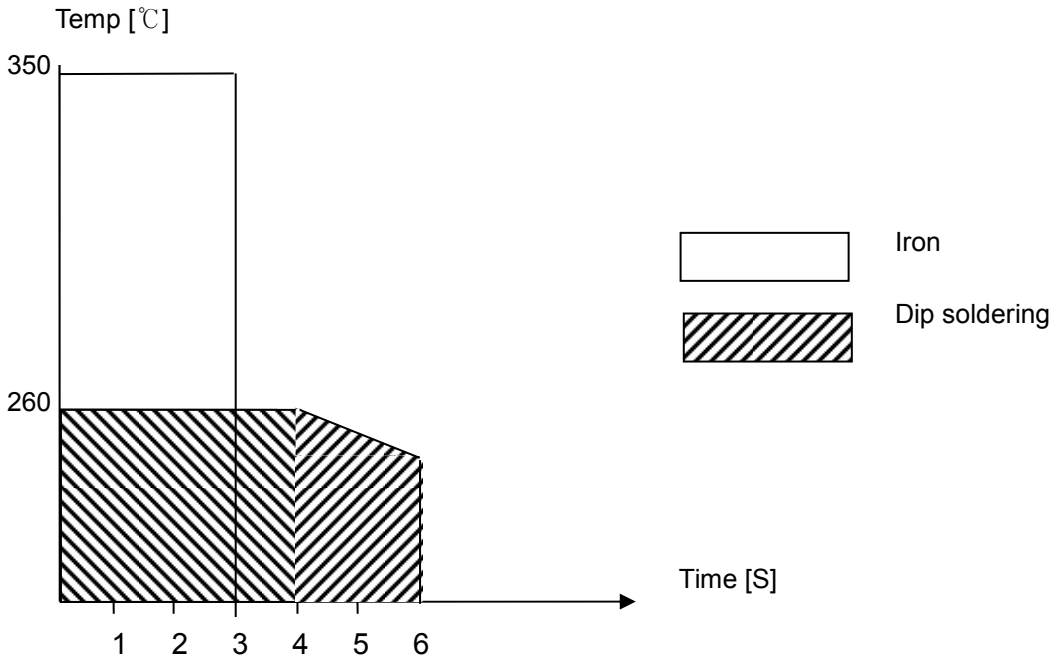

[If dipping a capacitor into solder twice, the second dipping shall be carried after the capacitor itself has returned to normal temperature]

Not passing through adhesive curing oven in order to fix the SMD parts in combination with leads parts.
- Not reflow soldering by combine the lead parts with SMD parts.

When cleaning right after soldering, make sure the capacitor surface temperature is lower than 50℃

Wave soldering profile (Recommendation)

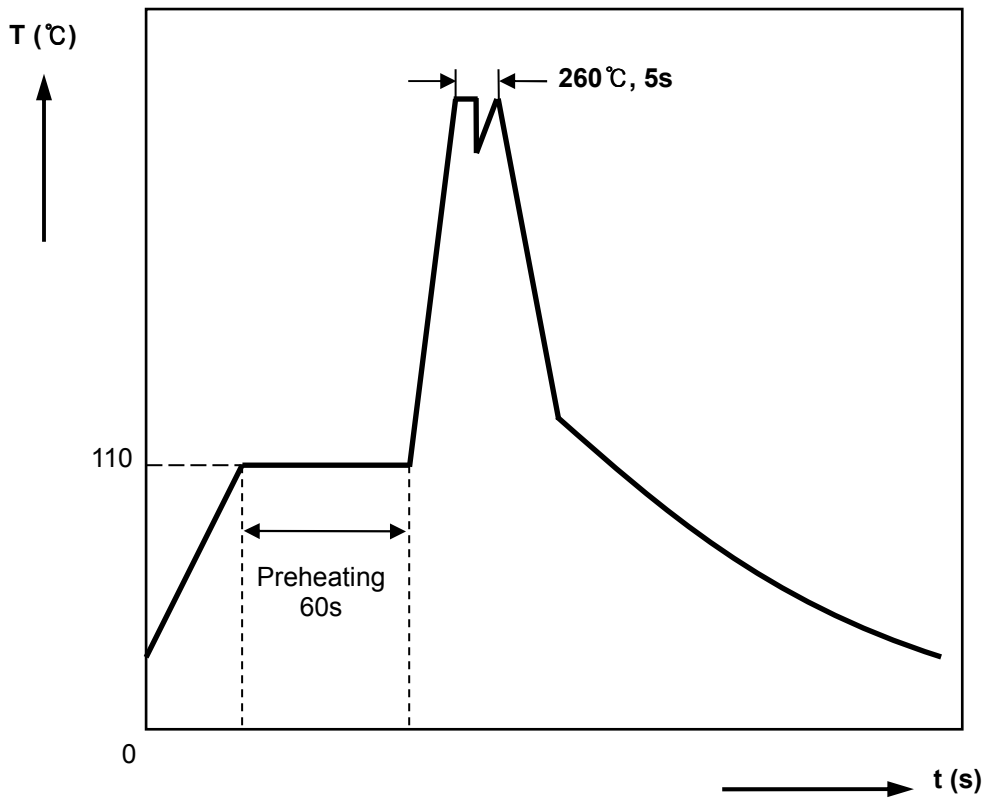

- Solder bath Temperature : 260 ℃ Max.

- Shield : Heat-absorbing board, (1.5±0.5)mm thick, between capacitor body and liquid solder

- Visual inspection : No visible damage

*** Soldering conditions**

-When mounting, set the soldering temperature so that the capacitor inside peak temperature is to be lower than the given above heat resisting temperature.

-If dipping a capacitor into solder twice, the second dipping shall be carried after the capacitor itself has returned to normal temperature.

-Not passing through adhessive curing oven in order to fix the SMD parts in combination with leads parts. Not reflow soldering by combine the lead parts with SMD parts.

-When cleaning right after soldering, make sure the capacitor surface temperature is lower than 50℃.