Product Approval Sheet

Customer : 삼성전자

Issued no : 2015. 08. 04.
Revision no :

- Product description : EMI Suppression film capacitors
- Product code : PCX2 337 S0198
- Application :

CUSTOMER			
PILKOR	Checked	Confirmed	Approved

Headquarters : 381, Woncheon-dong, Yeong tong-gu, Suwon-si, Gyeonggi-do, Korea
PILKOR Electronics Division (of COWELL Fashion Co., Ltd.)
TEL. +82-31-217-2500 FAX. +82-31-217-7465

China factory : No 25 Zoutai South Road Rongcheng City, Shandong Province China
Rongcheng PILKOR Electronics Co., Ltd.
TEL. +86-631-755-6001~3 FAX, +86-631-755-6004

* Please send it back to us before placing order.

APPROVAL CODE LIST (X-CAP)

■ Approved Date : 2015. 08. 04.

■ Manufacture Name : 필코전자 (한국,중국)

No	Specification												Measuring Spec		
	Series	Manufacture P/N	Code No.	Cap [uF]	Tol	Voltage	Temp	Dimension	Lead Pitch	TP /BK	weight info.		Width standing Voltage	Tan δ	Insulation Resistance
					(%)	(V)	(℃)	(mm)	(mm)		Gross (Kg)	Net(g)	Time = 1min (Vdc)	f=10KHz (%)	V = 100V Time = 1min(RC) (MΩ)
40/100/21 305V~															
1	PCX2 337	PCX2 337 S0198	-	0.47	10	275	-40～+100	11.0*18.5*18.0	15.0	BK	9.1	4.7	2250	Max 0.2	10,600

목 차 *(Contents)*

Safety

1. 일 반 ***Page 1***

(General)

2. 특 성 곡 선 ***Page 7***

(Characteristics)

3. 인 쇄 및 포 장 ***Page 8***

(Mark & Packing)

4. 신 뢰 성 시 험 ***Page 13***

(Test Requirements)

**** Construction***

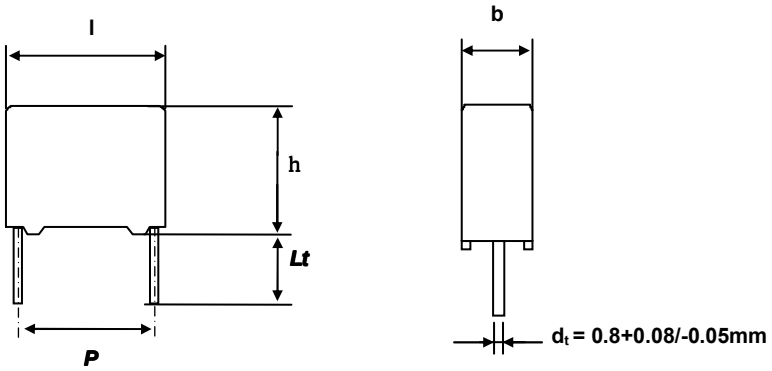

Voltage V~	Cap. µF	Code PCX2 337	C-tol.	Dimensions b ×h ×l mm	P mm	Lt mm
275	0.47	S0198	±10 %	11.0 x 18.5 x 18.0	15.0±0.4	3.7±0.5

CAPACITOR SAME AS PCX2 337 99002

< BUT >

- ***Lt = 3.7 ± 0.5*** ㎜

- ***PACKING METHOD : ARRANGE PACKING***

Packing method	Styrofoam	SPQ	PQ
8242 450 40066	8242 456 30171	180 (8242 451 10171)	1800 (8242 451 30671)

EMI Suppression film capacitors

Safety

PCX2 337x1 (Standard)

MKP RADIAL POTTED CAPACITORS **Pitch 10.0/15.0/22.5/27.5 mm**

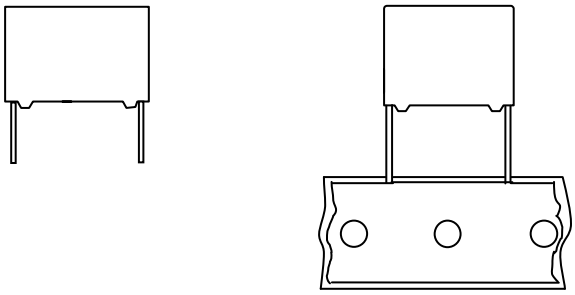

QUICK REFERENCE DATA

Capacitance range (E6 series) *	0.01µF to 3.3µF
Capacitance tolerance	± 10 %, ± 20 %
Rated (AC) voltage 50 to 60 Hz	275 V~
Climatic category	40/100/21
Temperature range	-40℃ ~ +100℃
Reference IEC specification	IEC 60384-14(3rd edition) and EN 60384-14
Safety approvals	UL60384-14 & CSA E60384-14:09(cUL), ENEC, EK, CQC
Potting & Encapsulation material	Qualified in accordance with UL 94V-0
Safety class	X2

* Intermediate values of the E12 series are available to special order

FEATURES	APPLICATIONS
. 10 to 27.5 mm lead pitch . Supplied loose in box and taped on reel . Consist of a low-inductive wound cell of Metallized (PP) film . potted in a flame retardant case	. For X2-electromagnetic interference suppression . Specially designed to meet the NEW REQUIREMENTS of new IEC 60384-14 Specification(3rd edition)/ EN 60384-14/UL60384-14 requiring a 2.5kV peak pulse voltage test . Not for use in series with the mains

• Please refer to caution and warning at http://www.pilkor.co.kr/download/Introductions.pdf before using these products.

Ordering Information

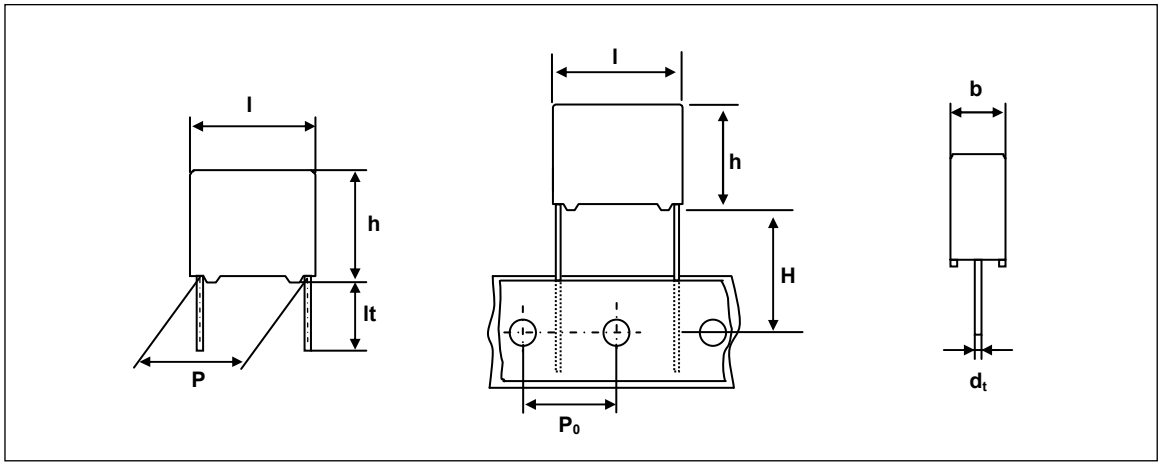

PCX2 337 (X) X X X X X

- PCX2 337: Type series
- (X): *Code
- X: Version & Voltage
- X X X: Capacitance

Code	Version & Voltage
1	Standard / 275V

*Code	Original pitch
F	15.0mm

**** In case of overlapping the value, use the 13NC with pitch information.***

Available versions					Product (l_{max})			
Code	Packing method	C – tol.	Lead length & Height	Hole to hole (P_o)	12.5	18.0	26.0	31.0
					Pitch (P)			
0	Loose in box	±20 %	lt = 5.0±1.0mm	-	10.0	15.0	22.5	27.5
1	Loose in box	±10 %	lt = 5.0±1.0mm	-	10.0	15.0	22.5	27.5
4	Loose in box	±20 %	lt =25.0±2.0mm	-	10.0	15.0	22.5	27.5
5	Loose in box	±10 %	lt =25.0±2.0mm	-	10.0	15.0	22.5	27.5
6	Ammopack	±20%	H = 18.5mm*	12.7mm	10.0	15.0	22.5	27.5
7	Ammopack	±10%	H = 18.5mm*	12.7mm	10.0	15.0	22.5	27.5
R	Loose in box	±20 %	lt = 3.7±0.3mm	-	10.0	15.0	22.5	27.5
S	Loose in box	±10 %	lt = 3.7±0.3mm	-	10.0	15.0	22.5	27.5

* H ; intape height ; for detailed specifications refer to chapter PACKAGING
** Some values do not follow coding rule.

SAFETY APPROVALS

SAFETY APPROVALS	Voltage	Value	File Number
UL 60384-14 & CSA E60384-14:09(cUL)	305V(AC)	10nF to 3.3µF	E165646
ENEC(SEMKO) *	275V(AC)	10nF to 3.3µF	SE/0256-1
EK	275V(AC)	10nF to 3.3µF	SH03001-2003
CQC	275V(AC)	10nF to 3.3µF	CQC04001009332

* The ENEC-approval together with the CB-Certificate replace all national approval marks of the following countries(they have already signed the ENEC-Agreement): Austria; Belgium; Czech. Republic; Denmark; Finland; France; Germany; Greece; Hungary; Ireland; Italy; Luxembourg; Netherlands; Norway; Portugal; Slovenian; Spain; Sweden; Switzerland and United Kingdom

Packaging Information

SMALLEST PACKING QUANTITIES (SPQ)	LOOSE IN BOX	
DIMENSIONS	lt = 5.0 ± 1.0 mm	lt = 25 ± 2.0 mm
4.0 x 10.0 x 12.5	2000	1200
5.0 x 11.0 x 12.5	1500	1000
6.0 x 12.0 x 12.5	1000	1000
7.0 x 13.5 x 18.0	1000	1000
8.5 x 15.0 x 18.0	1000	1000
10.0 x 16.5 x 18.0	1000	1000
11.0 x 18.5 x 18.0	1000	1000
12.0 x 20.0 x 18.0	1000	1000
8.5 x 18.0 x 26.0	500	500
10.0 x 19.5 x 26.0	500	500
13.0 x 23.0 x 26.0	500	500
15.0 x 25.0 x 31.0	250	250
18.0 x 28.0 x 31.0	200	200
21.0 x 31.0 x 31.0	150	150

SPECIFIC REFERENCE DATA FOR 275 V_{AC}

Tangent of loss angle	at 1 khz	at 10 khz
C ≤ 470 nF 470 nF < C ≤ 1 µF C > 1 µF	≤ 10 x 10^{-4} ≤ 20 x 10^{-4} ≤ 30 x 10^{-4}	≤ 20 x 10^{-4} ≤ 70 x 10^{-4} -
Rated voltage pulse slope $(dV/dt)_R$ P = 10.0mm P = 15.0mm P = 22.5mm P = 27.5mm	550 V/µs 400 V/µs 200 V/µs 150 V/µs	
R between leads, for C ≤ 0.33 µF	> 15 000 MΩ	
RC between leads, for C > 0.33 µF	> 5 000 s	
Withstanding(DC) Voltage (cut-off current 10mA) C ≤1 µF 1 µF < C ≤3.3 µF	2250 V, 1 min 1850 V, 1 min	
Withstanding(AC) Voltage between leads and case	2400V 1min	

V_{Rac} = 275 V~ X2 **loose and taped**

Cap. (µF)	b x h x l (mm)	MASS (g)	CATALOGUE NUMBER PCX2 337 ..... loose in box			
			lt = 5 ± 1.0 mm		lt = 25 ± 2.0 mm	
			C – tol. ±20 %	C – tol. ±10 %	C – tol. ±20 %	C – tol. ±10 %
Pitch = 10.0 ± 0.4 mm dt = 0.6 +0.06/-0.05 mm						
0.01	4.0 x 10.0 x 12.5	0.8	10103	11103	14103	15103
0.015	4.0 x 10.0 x 12.5	0.8	10153	11153	14153	15153
0.022	4.0 x 10.0 x 12.5	0.8	10223	11223	14223	15223
0.033	5.0 x 11.0 x 12.5	0.9	10333	11333	14333	15333
0.047	5.0 x 11.0 x 12.5	0.9	10473	11473	14473	15473
0.068	6.0 x 12.0 x 12.5	1.0	10683	11683	14683	15683
0.1	6.0 x 12.0 x 12.5	1.0	10104	11104	14104	15104
Pitch = 15.0 ± 0.4 mm dt = 0.8 +0.08/-0.05 mm						
0.01	5.0 x 11.0 x 18.0	1.6	F10103	F11103	F14103	F15103
0.015	5.0 x 11.0 x 18.0	1.6	F10153	F11153	F14153	F15153
0.022	5.0 x 11.0 x 18.0	1.6	F10223	F11223	F14223	F15223
0.033	5.0 x 11.0 x 18.0	1.6	F10333	F11333	F14333	F15333
0.047	5.0 x 11.0 x 18.0	1.6	F10473	F11473	F14473	F15473
0.068	5.0 x 11.0 x 18.0	1.6	F10683	F11683	F14683	F15683
0.1	5.0 x 11.0 x 18.0	1.6	FJ0104	FJ1104	FJ4104	FJ5104
0.1	6.0 x 12.0 x 18.0	1.8	F10104	F11104	F14104	F15104
0.15	7.0 x 13.5 x 18.0	1.9	10154	11154	14154	15154
0.22	8.5 x 15.0 x 18.0	2.6	10224	11224	14224	15224
0.33	10.0 x 16.5 x 18.0	3.1	10334	11334	14334	15334
0.47	11.0 x 18.5 x 18.0	4.1	99001	99002	99003	99004

; Mini Type (xJxxxx)

EMI Suppression film capacitors

Safety

PCX2 337x1 (Standard)

V_{Rac} = 275 V~ X2 **loose and taped**

Cap. (µF)	b x h x l (mm)	MASS (g)	CATALOGUE NUMBER PCX2 337 ..... loose in box			
			lt = 5 ± 1.0 mm		lt = 25 ± 2.0 mm	
			C – tol. ±20 %	C – tol. ±10 %	C – tol. ±20 %	C – tol. ±10 %
Pitch = 22.5 ± 0.4 mm dt = 0.8 +0.08/-0.05 mm						
0.47	8.5 x 18.0 x 26.0	4.4	10474	11474	14474	15474
0.68	10.0 x 19.5 x 26.0	5.5	10684	11684	14684	15684
1.0	13.0 x 23.0 x 26.0	8.0	10105	11105	14105	15105
Pitch = 27.5 ± 0.4 mm dt = 0.8 +0.08/-0.05 mm						
1.5	15.0 x 25.0 x 31.0	12.8	10155	11155	14155	15155
2.2	18.0 x 28.0 x 31.0	17.2	10225	11225	14225	15225
3.3	21.0 x 31.0 x 31.0	20.4	10335	11335	14335	15335

MOUNTING

NORMAL USE

The capacitors are designed for mounting on printed-circuit boards.

The capacitors packed in bandoliers are designed for mounting on printed–circuit boards by means of automatic insertion machines.

For detailed specifications refer to chapter "PACKAGING".

SPECIFIC METHOD OF MOUNTING TO WITHSTAND VIBRATION AND SHOCK

In order to withstand vibration and shock tests, it must be ensured that the stand-off pips are in good contact with the printed-circuit board.

. For pitches of 15mm the capacitors shall be mechanically fixed by leads.

. For larger pitches the capacitors shall be mounted in the same way and the body clamped.

SPACE REQUIREMENTS ON PRINTED-CIRCUIT BOARD

The maximum length and width of film capacitors are shown in the following drawing ;

- Eccentricity as in drawing.

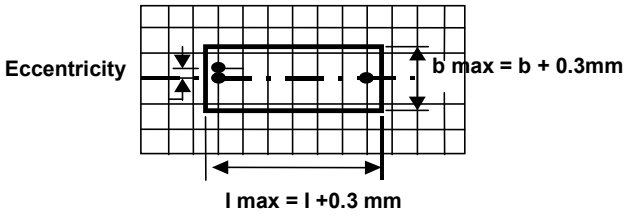

The maximum eccentricity is smaller than or equal to the lead diameter of the product concerned.

- Product height with seating plane as given by IEC 60717 as reference : $h_{max.} \leq h + 0.3mm$

STORAGE TEMPERATURE

. Storage temperature : T_{stg} = -25 to +40 ^{o}C with RH maximum 80% without condensation.

RATINGS AND CHARACTERISTICS

Unless otherwise specified all electrical values apply to an ambient temperature of 23±1℃, an atmospheric pressure of 86 to 106kPa and a relative humidity 50±2%.

For reference testing, a conditioning period shall be applied of 96±4 hours by heating the products in a circulating air oven at the rated temperature and a relative humidity not exceeding 20%.

Maximum RMS Voltage as a function of frequency

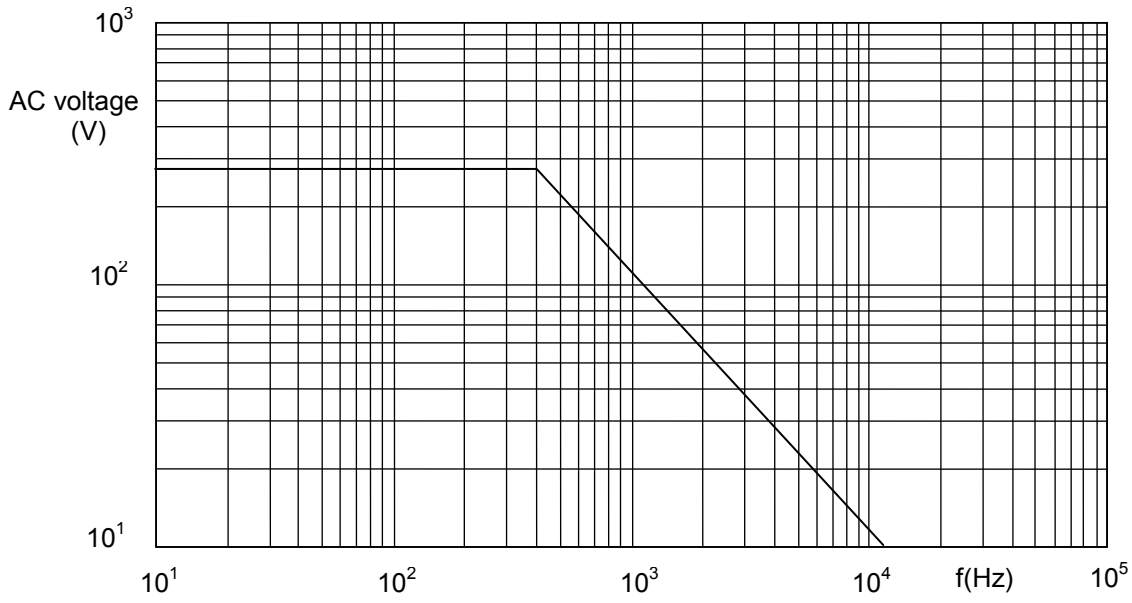

AC voltage (RMS value) as a function of frequency at $T_{amb} \leq 100$℃

PRODUCT MARKING

Capacitors are marked with the following information ;

1.Manufacturer (PILKOR) for capacitors with original pitch ≥15mm,
PILKOR trade mark for pitch=10mm
2.Manufacturer's type designation (PCX2 337)
3.Rated capacitance in code according to IEC 60062
4.Rated (AC) voltage (275V~)
5.Sub class (X2)
6.Tolerance on rated capacitance M = ± 20 % K = ± 10 %
7.Climatic category (40/100/21)
8.Code for dielectric material (MKP) for capacitors with original pitch ≥15mm
9.Year and week of manufacturing (1301)
10.Safety approvals

Example of marking

Pitch P = 10mm

Marking on the side

or

Marking on the side

Pitch P = 15.0mm or P = 22.5 mm or P = 27.5mm

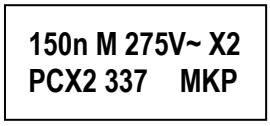

Marking on the top

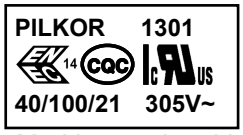

Marking on the side

Pitch P = 22.5 mm or P = 27.5mm

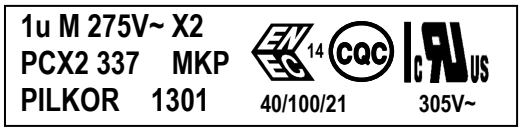

Marking on headface

Pitch P = 27.5mm

Marking on the top

PACKAGE MARKING

The package containing the capacitors in marking as shown.

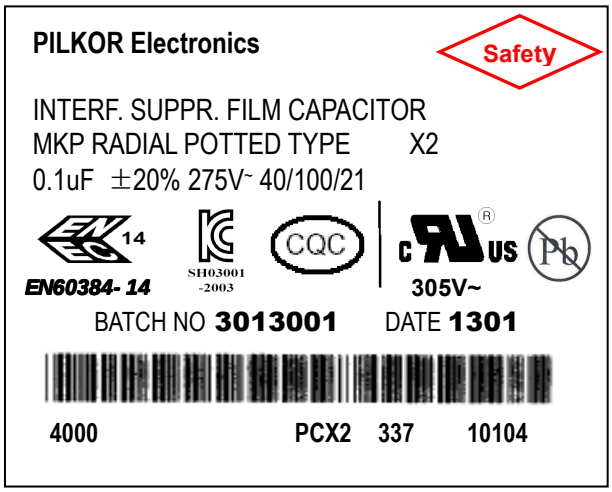

1 Manufacturer's name
2 Sub-family
3 Type description and safety class X2
4 Capacitance value, tolerance, voltage
and climatic category (IEC)
5 Safety approvals & Lead free marking(JEDEC-STD-97)
6 Batch nr. & production period year and week code
7 Quantity and Product code (12NC)

*** Color of Label : White

Color of Safety Marking : Red

PACKAGIING

DIMENSIONS OF TAPED PRODCUTS TAPED ON REEL

Capacitor with terminal pitch P = 10 mm

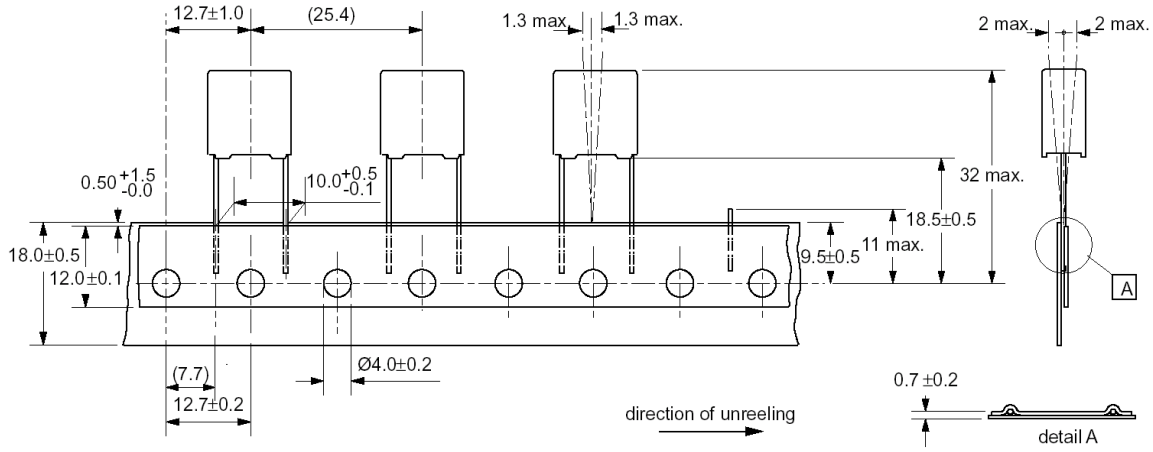

Capacitor with terminal pitch P = 15 mm.

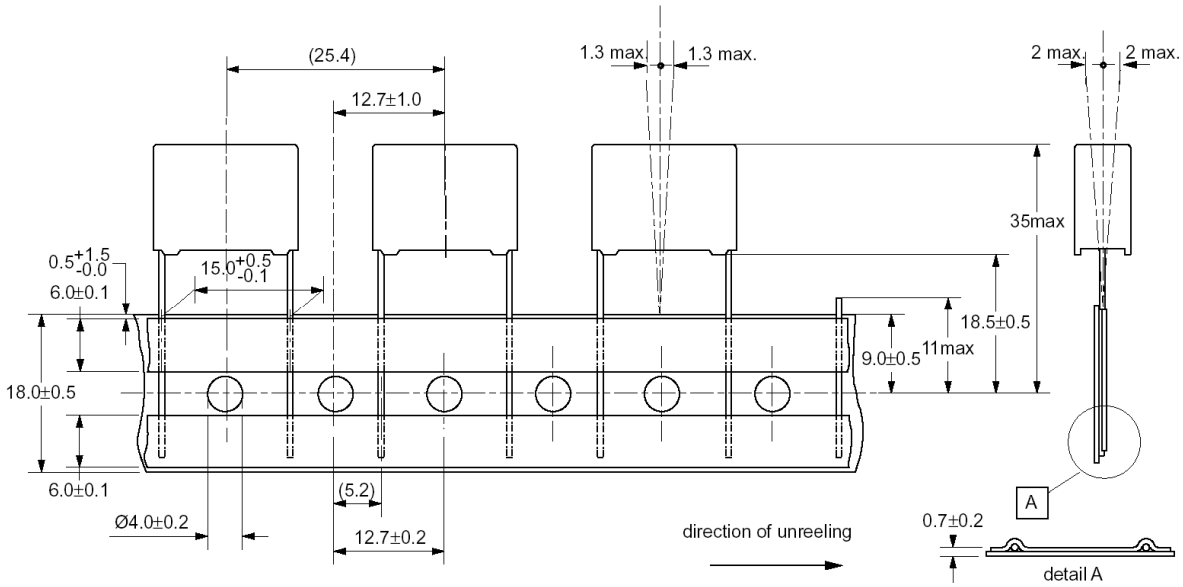

Capacitor with terminal pitch P = 22.5 or 27.5 mm

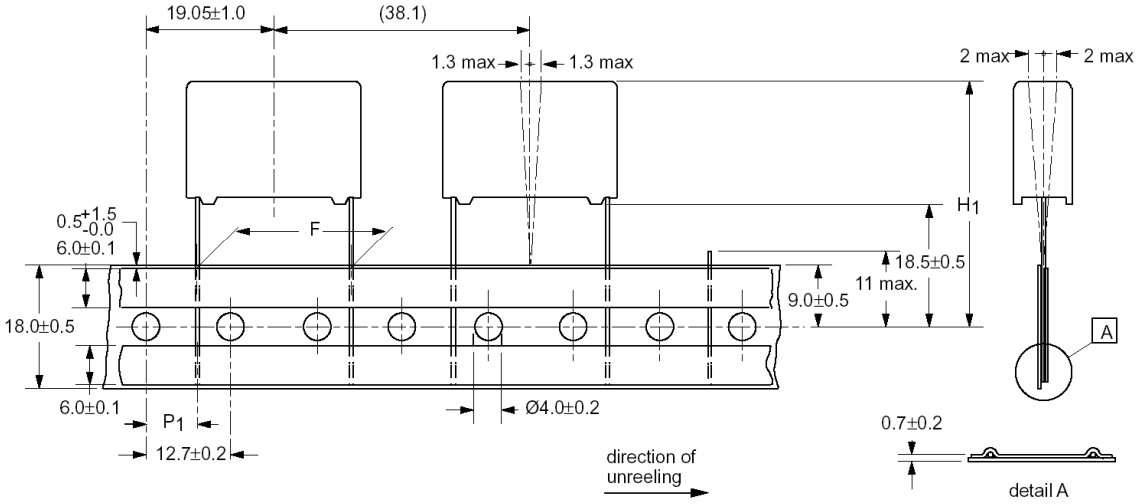

ITEM	SYMBOL	VALUE	VALUE	TOLERANCE
LEAD TO LEAD DISTANCE(mm)	F	22.5	27.5	+0.5/-0.1
HEIGHT OF COMPONENT FROM TAPE CENTER TO SEATING PLANE(mm)	H	18.5		0.5
COMPONENT HEIGHT FROM TAPE CENTER(mm)	H_1	40 max	48 max	
FEED HOLE TO LEAD CENTER(mm)	P_1	7.8	5.33	0.7

CHARACTERRISTICS OF TAPED PRODCUTS

Cumulative pitch error 1.0mm/20 pitches

Pull-out force of the component	≥	**5 N**
Pull-out force of the adhesive tape	≥	**6 N**
Tearing force of tape	≥	**15 N**
Storage temperature		**- 25 to + 40 ℃**
Relative humidity		**max. 80% without condensation**

The max. number of empty places per reel shall not exceed 0.5% of the total number of components per reel, but no more than 2 consecutive positions may be vacant.

Outlines of reel & ammo packing (dimensions in mm)

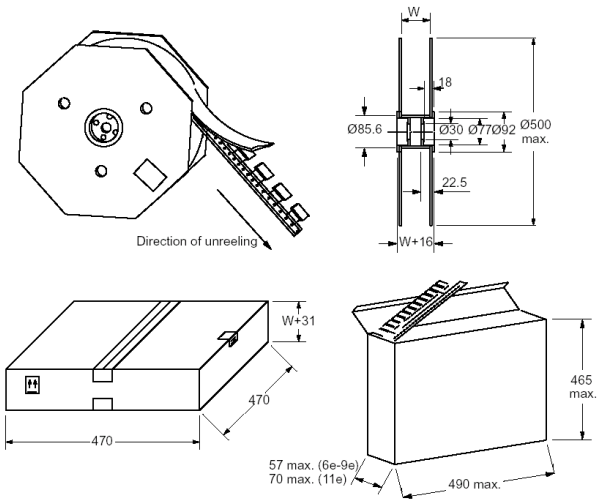

W as function of product dimensions

l = 12.5 or 18.0 mm		l = 26 or 31 mm	
b (mm)	W 2 (mm)	b (mm)	W 2 (mm)
4.0	40	6.0	50
5.0	45	7.0	50
6.0	45	8.5	50
7.0	45	9.0	50
8.5	45	10.0	50
10.0	50	11.0	55
		13.0	55
		15.0	60
		18.0	60

INSPECTION REQUIREMENTS

Note 1 : Sub-clause numbers of tests and performance requirements refer to the Sectional Specification, IEC 384-14 and Section One this specification.
Note 2 : Inspection levels are selected from IEC-Publication 410: Sampling Plans and Procedures for inspection by attributes.
Note 3 : In this table : p = periodicity in months
n = sample size
D = destructive
ND = non-destructive
IL = inspection level) IEC 410
AQL = acceptance quality level)

Note 4 : For this capacitors, considered as a solid construction, the periodicity of the vibration and shock test is reduced from 6 months to 36 months.

Clause number and Test	D or ND	Condition	IL	n	Performance Requirements
Group A inspection (lot by lot)					
Sub-Group A1	ND				
4.1 Visual examination		Detail	S4	1)	No visual damage , legible marking and as specified in Marking specification
Dimension 2)			S3	1)	As specified in dimension table of this specification
Sub-Group A2 3)	ND				
4.2.2 capacitance		At 1kHz			Within specified tolerance
4.2.3 Tangent of loss angle		at 10kHz C ≤ 1μF at 1kHz C > 1μF			As in RATING AND CHARACTERISTICS OF this specification
4.2.1 Voltage proof (test A)		1. C ≤ 1μF 2250V 1min 2. C > 1μF 1850V 1min			No permanent breakdown (cut-off current 10mA) or flash over Self-healing allowed
4.2.5 Insulation resistance (test A)		At 100V 1min.			As in rating and characteristics of this specification

1) Number to be tested : Sample size as directly allotted to the code letter for IL in Table 2A of IEC 410 (Single sampling plan for normal inspection)
The acceptance number complies with AQL value : 0.65 %

2) This test may be replaced by in-production testing, if SPC on dimensional measurements or other mechanisms to avoid parts exceeding the limits is installed.

3) The 100% End-of-line testing is followed by re-inspection by sampling in order to monitor outgoing quality level by defectives per million (DPM). The sampling level and the calculation of DPM values is in accordance with CECC 00 014, counting any parametric failure as a defective. In case one or more defectives occur in a lot, this lot shall be rejected.

Clause number and Test	D or ND	Condition	p	n	Performance Requirements
Group C inspection (periodic)			6	6	
Sub-group C1A Part of a sample of sub-group C1	D				
4.1 dimension (detail)					As specified in dimension table of this specification
4.3.1 initial measurement		1. Capacitance at 1kHz 2. Tangent of loss angle at 10kHz C ≤ 1μF at 1kHz C > 1μF			
4.3 robustness of terminations		Tensile and bending			No visible damage
4.4 resistance to soldering heat		Method : 1A Solder bath : 260℃ Duration : 10 s			
4.14 component solvent resistance		Isopropylalcohol at room temperature Method : 2 Immersion time : 5± 0.5min Recovery time : min 1hour max 2hours			
4.4.2 final measurements		Visual examination			No visible damage Legible marking
		1. Capacitance at 1kHz			ΔC/C ≤ 5% of the value measured initially
		2. Tangent of loss angle at 10kHz C ≤ 1μF at 1kHz C > 1μF			Increase of tanD For C ≤ 1μF < 0.0080 For C > 1μF < 0.0050
		Insulation resistance			As in rating and characteristics of this specification

Clause number and Test	D or ND	Condition	p	n	Performance Requirements
Group C inspection (periodic)					
Sub-group C1B Other part of a sample of sub-group C1	D		6	12	
4.6.1 initial measurement		1. Capacitance at 1kHz 2. Tangent of loss angle at 10kHz C ≤ 1μF at 1kHz C > 1μF			
4.6 rapid change of temperature		⊖A = lower category temperature ⊖B = upper category temperature 5 cycles duration time : 30 min			
4.7 vibration (see note 4)		Method of mounting : see the mounting of this specification Procedure : B4 Frequency range 10Hz to 55Hz amplitude : 0.75mm or acceleration 98m/s^2(which is less severe) Total duration : 6 hours			
4.7.2 final examination		Visual examination			No visible damage
4.9 shock (see note 4)		Method of mounting : see the mounting of this specification Pulse shape : half sine Acceleration : 490 m/s^2 Duration of pulse : 11ms			
4.9.3 final measurements		Visual examination			No visible damage
		1. Capacitance at 1kHz			ΔC/C ≤ 5% of the value measured initially
		2. Tangent of loss angle at 10kHz C ≤ 1μF at 1kHz C > 1μF			Increase of tanD For C ≤ 1μF < 0.0080 For C > 1μF < 0.0050
		Insulation resistance			As in rating and characteristics of this specification

Clause number and Test	D or ND	Condition	p	n	Performance Requirements
Group C inspection (periodic)					
Sub-group C1 Combined sample of specimens of sub-groups C1A and C1B	D		6	18	
4.11 climatic sequence 4.11.2 dry heat 4.11.3 damp heat cyclic test Db, first cycle 4.11.4 cold 4.11.6 damp heat cyclic test Db, remaining cycle 4.11.6.2 final measurements		 T = $T_{upper\text{-}category\ temperature}$ Duration : 16 hours T = $T_{lower\text{-}category\ temperature}$ Duration : 2 hours Visual examination 1. Capacitance at 1kHz 2. Tangent of loss angle at 10kHz C ≤ 1μF at 1kHz C > 1μF Insulation resistance Voltage proof 1200V (DC) for 1min			 No visible damage Legible marking ΔC/C ≤ 5% of the value measured initially Increase of tanD For C ≤ 1μF < 0.0080 For C > 1μF < 0.0050 ≥ 50% of values in ratings and characteristics of this specification No permanent breakdown or flash over

Clause number and Test	D or ND	Condition	p	n	Performance Requirements
Sub-group C2	D		6	10	
4.12 damp heat steady state 4.12.1 initial measurements 4.12.3 final measurements		21 days, 40℃ 90 – 95% R.H 1. Capacitance at 1kHz 2. Tangent of loss angle at 10kHz C ≤ 1μF at 1kHz C > 1μF Visual examination 1. Capacitance at 1kHz 2. Tangent of loss angle at 10kHz C ≤ 1μF at 1kHz C > 1μF Voltage proof 1200V(d.c) 1min Insulation resistance			No visible damage Legible marking ΔC/C ≤ 5% of the value measured initially Increase of tanD For C ≤ 1μF < 0.0080 For C > 1μF < 0.0050 No permanent breakdown or flash over ≥ 50% of values in ratings and characteristics of this specification

Clause number and Test	D or ND	Condition	p	n	Performance Requirements
Sub-group C3	D		3	12	
4.13.1 initial measurements		1. Capacitance at 1kHz 2. Tangent of loss angle at 10kHz C ≤ 1μF at 1kHz C > 1μF			
4.13 peak impulse voltage		3 successive impulse, full wave, peak voltage : for C ≤ 1μF : 2.5kV for C > 1μF : 2.5kV/√C (C in μF) max : 24 pulses			No selfhealing breakdown or flashover
4.14 endurance test		Duration : 1000 hours 1.25 x V_{Rac} at 100℃ once in every hour the voltage is increased to 1000V(RMS) for 0.1 s via a resistor of 47Ω± 5%			
4.12.3 final measurements		Visual examination			No visible damage Legible marking
		1. Capacitance at 1kHz			ΔC/C ≤ 10 % of the value measured initially
		2. Tangent of loss angle at 10kHz C ≤ 1μF at 1kHz C > 1μF			Increase of tanD For C ≤ 1μF < 0.0080 For C > 1μF < 0.0050
		Insulation resistance			≥ 50% of values in ratings and characteristics of this specification
		Voltage proof 1200V (DC) for 1 min			No permanent breakdown or flashover

Clause number and Test	D or ND	Condition	p	n	Performance Requirements
Sub-group C4	D		6	6	
4.15.1 initial measurements		1. Capacitance at 1kHz 2. Tangent of loss angle at 10kHz C ≤ 1µF at 1kHz C > 1µF			
4.15 charge and discharge		10000 cycles : charge to V_R half sine wave Duration : 5ms Discharge resistance $R = \frac{V_{RAC} \times \sqrt{2}}{1.5 \times C \times (dU/dt)}$ with a minimum : 2.2Ω			
4.15.3 final measurements		1. Capacitance at 1kHz 2. Tangent of loss angle at 10kHz C ≤ 1µF at 1kHz C > 1µF Insulation resistance			ΔC/C ≤ 10% of the value measured initially Increase of tanD For C ≤ 1µF < 0.0080 For C > 1µF < 0.0050 ≥ 50% of values in ratings and characteristics of this specification

<table>
<tr><th>Clause number and Test</th><th>D or ND</th><th>Condition</th><th>p</th><th>n</th><th>Performance Requirements</th></tr>
<tr><td>Sub-group C6</td><td>D</td><td></td><td>12</td><td>18</td><td></td></tr>
<tr><td>4.17 passive flammability</td><td></td><td>Bore of gas jet : ϕ 0.5 mm
Fuel : Butane
Test duration for actual volume V in mm^3

class B

<table>
<tr><th>Volume(mm^3)</th><th>Gas jet</th></tr>
<tr><td>V ≤ 250</td><td>10s</td></tr>
<tr><td>250 〈 V ≤ 500</td><td>20s</td></tr>
<tr><td>500 〈 V ≤ 1750</td><td>30s</td></tr>
<tr><td>V ＞1750</td><td>60s</td></tr>
</table>

One flame application
 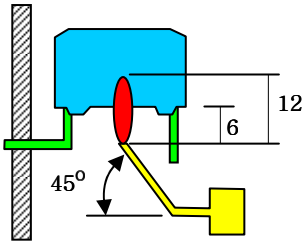
</td><td></td><td></td><td>1.class B
After removing test flame from capacitor, the capacitor must not continue burn for more than 10 s.

2.No burning particle must drop from the sample</td></tr>
<tr><td>Sub-group C7</td><td>D</td><td></td><td>12</td><td>24</td><td></td></tr>
<tr><td>4.18 active flammability</td><td></td><td>20 discharges of a 3 uF tankcapacitor across the test capacitor. The test capacitor during the discharges connected to V_R (16A). V_R is maintained for 2 min after the last discharge</td><td></td><td></td><td>The cheese cloth around the capacitor shall not burn with a flame. Not electrical measurements are required.</td></tr>
</table>

Clause number and Test	D or ND	Condition	p	n	Performance Requirements
Sub-group ADD1	D		3	10	
A.1 Solder ability Solvent resistance of the marking		Without aging Method : 1 Non-activated colophiny flux 501 Solder bath : 245℃ Dwell time : 3s Isopropylalcohol at room temperature. Method : 1 Rubbing material cotton wool Immersion time : 5± 0.5min			Good tinning as evidenced by free flowing of the solder with wetting of the termination(> 95%) Legible marking
Sub-group ADD2	D		3	12	
A.2 Heat storage A.2.1 Initial measurement A.2.2 Final measurement		Duration : 1000h Temperature : upper category temperature 1. Capacitance at 1kHz 2. Tangent of loss angle at 10kHz C ≤ 1μF at 1kHz C > 1μF 1. Capacitance at 1kHz 2. Tangent of loss angle at 10kHz C ≤ 1μF at 1kHz C > 1μF Insulation resistance			 ΔC/C ≤ 5% of the value measured initially Increase of tanD For C ≤ 1μF < 0.0080 For C > 1μF < 0.0050 As in Rating and CHARACTERISTICS of this specification

Clause number and Test	D or ND	Condition	p	n	Performance Requirements
Sub-group ADD3	D		3	9	
A.3 Detergent resistance A3.1 Initial measurement A.3.2 Final measurement		Density 20g/L dishwasher detergergent Temperature 70℃ during 3 minutes followed by rinsing in clear water for 1 minute Recovery time : 1 to 2 hours 1. Capacitance at 1kHz 2. Tangent of loss angle at 10kHz C ≤ 1μF at 1kHz C > 1μF 1. Capacitance at 1kHz 2. Tangent of loss angle at 10kHz C ≤ 1μF at 1kHz C > 1μF Insulation resistance			 ΔC/C ≤ 5% of the value measured initially Increase of tanD For C ≤ 1μF < 0.0080 For C > 1μF < 0.0050 ≥ 50% of values in ratings and characteristics of this specification
Sub-group ADD4	D		6	10	
A.4 Resistance to soldering heat with preheating A.4.1 Initial measurement A.4.2 Final measurement		Capacitors mounted on 1.6mm board with nonplated hole Body temp : 100℃ Bath temp : < 260℃ Dwell time : 10 s 1. Capacitance at 1kHz 2. Tangent of loss angle at 10kHz C ≤ 1μF at 1kHz C > 1μF 1. Capacitance at 1kHz 2. Tangent of loss angle at 10kHz C ≤ 1μF at 1kHz C > 1μF			 ΔC/C ≤ 5% of the value measured initially Increase of tanD For C ≤ 1μF < 0.0080 For C > 1μF < 0.0050
Sub-group ADD5	D		12	10	
A.5 Thermal Shock		θA = lower category temperature θB = upper category temperature 100 cycles Duration t = 30 min			ΔC/C ≤ 10% Δtanδ(1KHz) < 0.005 R_{ins} ≥ 50% specified value

CONSTRUCTION

- Product type ; Metallized Polypropylene film capacitors
- Model name ; PCX2 Series

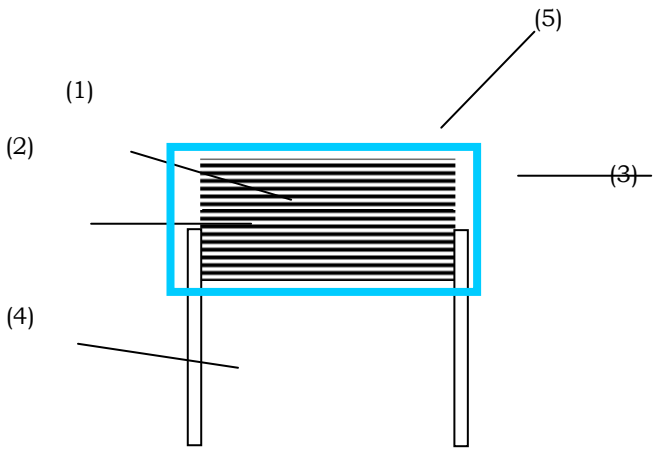

e3

Metallized Polypropylene film

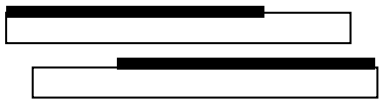

	Description	Material
1	MKP Film	Metallized polypropylene
2	Metal Spray	Tin-Zinc
3	Epoxy	UL94V-0
4	Lead wire	Tin plated Copper wire 0.6/0.8mm [Sn100%: 10㎛]
5	PP case	POLYPROPYLENE UL94-V0