■ Wire Wound Choke Coils

MECHANICAL DIMENSIONS

CP0908BI/M

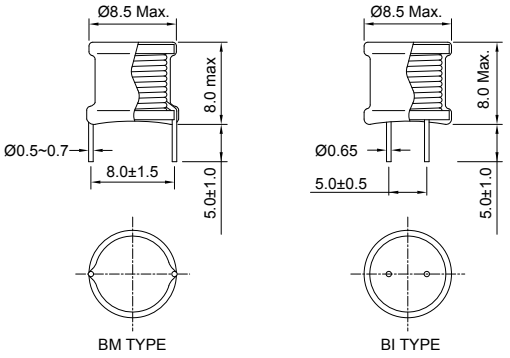

unit: mm

ELECTRICAL SPECIFICATION

Part Number	Inductance @1KHz (μH)	Q Min.	Test Freq. (KHz)	SRF (MHz) Min.	DCR (Ω) Max.	Rated Current (Amps.) Max.
CP0908BM-1R0MH	1.0	20	7.90	68	0.005	7.50
CP0908BM-1R5MH	1.5	20	7.90	56	0.008	6.60
CP0908BM-2R2MH	2.2	20	7.90	45	0.010	5.40
CP0908BM-3R3MH	3.3	20	7.90	38	0.013	4.50
CP0908BM-4R7MH	4.7	20	7.90	30	0.017	3.70
CP0908BM-6R8MH	6.8	20	7.90	24	0.022	3.10
CP0908BM-100KH	10	20	2.50	19	0.03	2.50
CP0908BM-120KH	12	20	2.50	17	0.04	2.20
CP0908BM-150KH	15	20	2.50	15	0.05	2.00
CP0908BI-180KH	18	20	2.50	13	0.06	1.80
CP0908BI-220KH	22	20	2.50	12	0.07	1.60
CP0908BI-270KH	27	20	2.50	11	0.08	1.40
CP0908BI-330KH	33	20	2.50	10	0.10	1.30
CP0908BI-390KH	39	20	2.50	9.0	0.12	1.20
CP0908BI-470KH	47	20	2.50	8.0	0.14	1.10
CP0908BI-560KH	56	20	2.50	7.0	0.16	0.96
CP0908BI-680KH	68	20	2.50	6.5	0.18	0.91
CP0908BI-820KH	82	20	2.50	6.0	0.20	0.83
CP0908BI-101KH	100	15	0.79	5.5	0.25	0.75
CP0908BI-121KH	120	15	0.79	5.0	0.33	0.68
CP0908BI-151KH	150	15	0.79	4.5	0.40	0.61
CP0908BI-181KH	180	15	0.79	4.0	0.50	0.55
CP0908BI-221KH	220	15	0.79	3.5	0.60	0.50
CP0908BI-271KH	270	15	0.79	3.2	0.70	0.45
CP0908BI-331KH	330	15	0.79	2.8	0.80	0.41
CP0908BI-391KH	390	15	0.79	2.5	0.90	0.37
CP0908BI-471KH	470	15	0.79	2.3	1.0	0.34
CP0908BI-561KH	560	15	0.79	2.1	1.3	0.31
CP0908BI-681KH	680	15	0.79	1.9	1.5	0.28
CP0908BI-821KH	820	15	0.79	1.7	2.0	0.25
CP0908BI-102KH	1000	30	0.25	1.5	2.5	0.23
CP0908BI-122KH	1200	30	0.25	1.3	3.0	0.20
CP0908BI-152KH	1500	30	0.25	1.2	3.5	0.18

- Tolerance: M±20%；L=±15%；K=±10%
- Test Equipment:
  L: HP 4285A LCR meter or equivalent.
  Q: HP 4285A at specified freq. or equivalent.
  RDC: CHROMA-16502 or equivalent.
  SRF: HP4291B or equivalent.
- Operating temperature: -40℃ to +85℃ (Including self-temperature rise)
- Temperature rise 25℃ Max.
- Ambient temperature: 60℃ Max.