		SPECIFICATIONS	SPEC.-CD1076A
DATE OF ISSUE	Jan. 9, 2007		1/9

1. ARTICLE: LED SEGMENT DISPLAY UNIT

2. TYPE: RCN-SDA03R3NL (Correspondence products of RoHS Restrictions)

3. OUTLINE: This product is the common anode and 1 column display unit which used red color LED with Pb-Free, aspect implementation, hollow type and height of 8.0mm (0.3 inches).

4. MAXIMUM RATING Ta=25℃

Item	Symbol	Rating	Unit
Forward direct current	I_F	20	mA/seg
Peak current	I_{FP}	※1 50	mA/seg
Reverse voltage	V_R	5	V
Storage temperature	Tstg	−40～+80	℃
Operating temperature	Topr	−30～+70	℃
Solder temperature	Tsol	350 within 3 sec.	℃

※1 pulse width is less than 10ms and duty ratio is less than 1/10
If duty ratio over 1/10, refer to 11.Typical Electrical Characteristics

5. ELECTRO-OPTICAL CHARACTERISTICS Ta=25℃

Item	Symbol	Condition		MIN	TYP	MAX	Unit
Forward voltage	V_F	I_F=10mA	SEG		1.90	2.4	V
			DP		1.90	2.4	
Reverse current	I_R	V_R=4V				10	μA
Luminous intensity	I_V	I_F=10mA	SEG	1.4	2.0		mcd
			DP	0.36	0.5		
Peak emission wavelength	λP	I_F=10mA			632		nm
Spectra half-width	Δλ	I_F=10mA			35		nm

Contents of luminosity rank

Rank 1 : The product which sorted by eyes check by sample of 11.0[mcd] as a standard sample that turns on entirely at I_F=10mA.

Rank 2 : The product which sorted by eyes check by sample s of 5.3[mcd] and 11.0[mcd] as a standard sample that turns on entirely at I_F=10mA.

Above mentioned one rank should be packed 1400pcs/one reel.

Note) The delivery ratio of each rank shall not be specified.
When distribution of the luminous intensity is maldistributed to the upper part, new rank will be set.

APPD.	CHK.	DESIGN	TRACE	OKAYA ELECTRIC INDUSTRIES CO., LTD.
T. Ogata	T. Kogahara	F. Kitahara	K. Miyata	1

6. CIRCUIT DIAGRAM・TERMINAL CONECTION LIST

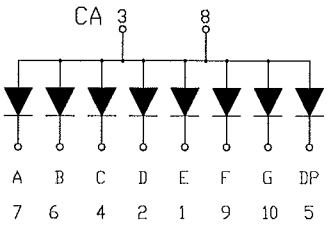

No.	FUNCTION
1	Cathode E
2	Cathode D
3	Anode COM
4	Cathode C
5	Cathode D.P
6	Cathode B
7	Cathode A
8	Anode COM
9	Cathode F
10	Cathode G

7. APPEARANCE

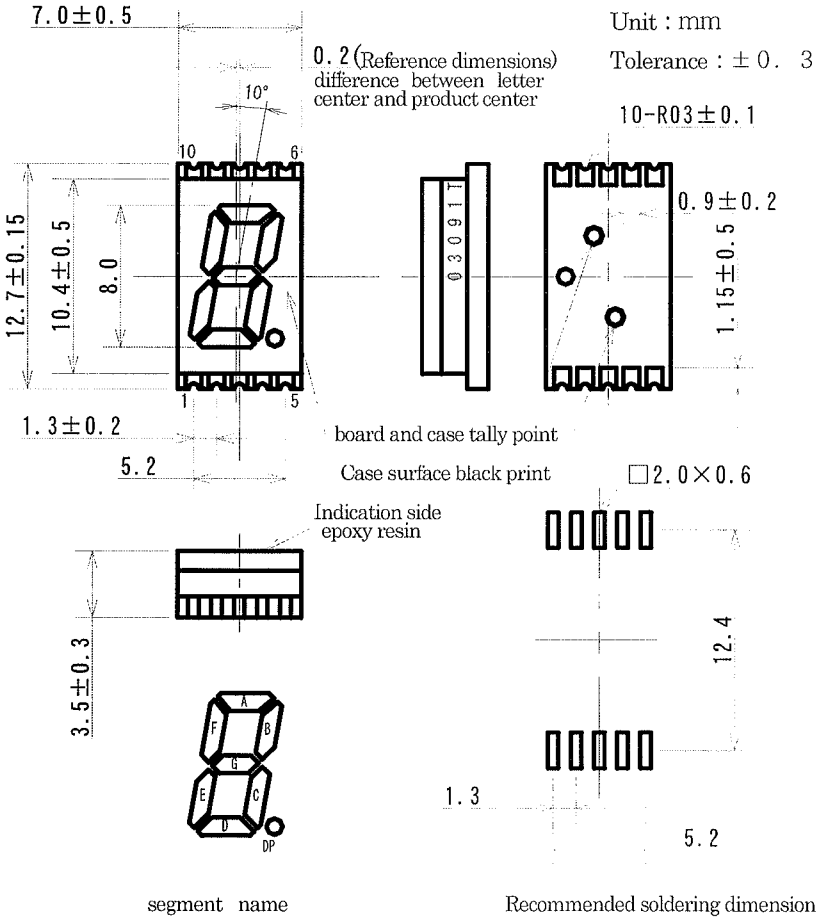

	Item	Materials	Q'ty
1	LED	GaAsP	8
2	Case resin	PPA	1
3	Boad	CEM-3	1
4	Case serface	Epoxy	—

・Board terminal burr : 0.1mmMAX.

8. SHIPPING INSPECTION

8-1 Application standard : ISO 2859-1

8-2 Sampling inspection method and level

Normal inspection 1 sample Level II

AQL	Serious defect	0. 4
	Small defect	2. 5
	Slight defect	6. 5

8-3 Inspection item, Judgment standard and defect classification

No.	Inspection item	Judgment standard	defect class.
1	Open	It is assumed defective which does not turn on.	Serious defect
2	Short	It is assumed defective which does not turn on. It is assumed defective which lighting at the same time.	
3	Emitting color	It is assumed defective that the emitting color does not satisfy the spec.	
4	Mixed other model	It is assumed defective which mixed other model.	
5	Marking	It is assumed defective which is wrong marking or no marking.	
6	Short of amount	It is assumed defective which is short of amount.	
7	Characteristic	It is assumed defective which does not satisfy electrical characteristic. It is assumed defective that the intensity of light does not satisfy MIN. value of spec.	Small defect
8	Dimensions	It is assumed defective that the external form does not satisfy spec dimensions.	
9	Color	It is assumed defective that the color between 7 segment is different.	
10	Waste	Waste gets mixed with in a segment or a decimal point ・black waste over 0.3mmφ is assumed defective. ・white waste over 0.4mmφ is assumed defective. ・thread waste over 3.0mm is assumed defective.	Slight defect
11	Air bubble	Air bubble in the emission of light side ・0.3mmφ over 2 places is assumed defective. ・air bubble of the product side is assumed good.	
12	Printing	Wound in printing area of the light reflector surface. ・0.2mm × 3.0mm over 2 places is assumed defective. Printing area of the light reflector surface comes off. ・0.3mmφ over 2 places is assumed defective.	

13	Surface wound	Wound in the side of the emission of light. ・It is assumed defective that the float of a product over 0.33mm on a flat board is defective.	
14	Resin stains	Resin stains on the back of product. ・It is assumed defective that the float of a product over 0.33mm on a flat board is defective.	
15	Segment shape	Pats of the segment deformed and thicken or thin. ・It is assumed defective which over 0.2mm.	
16	Resin burr	It is assumed defective which burrs exceed board dimensions tolerance.	

9. PACKAGE FORM

(1) Taping spec.

Lead-tape :

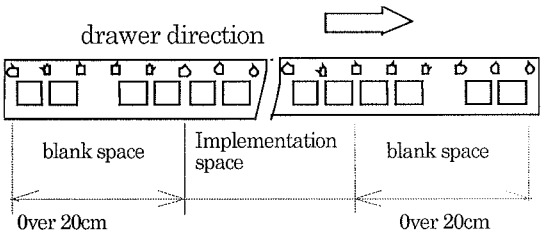

Tape detachment strength : 0.1~0.8N

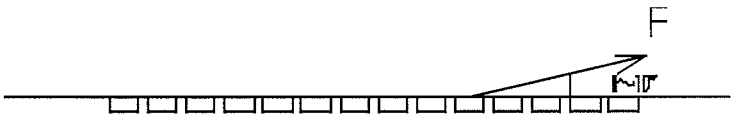

Tape forwarding speed : 5mm/s

tape forwarding direction carrier tape

Tape bending strength : It may leads to come off the cover tape, if bending the tape less than radius of 50mm.

Continuance of tape : There are no cover tape and a continuance of carrier tape in one reel.

Packing quantity : Standard quantity 1, 400pcs/reel

Others : Product fall should be within three consecutive at enclosed part of the implemented.
Packed product should move smoothly in each storage hole.
It should not adhere to the cover tape.

(2) Label indication

TYPE	← indicate the Item(model)
LOT NO.	← indicate the Lot
QUANTITY	← indicate the quantity
DATE	
NOTE	
OKAYA ELECTRIC INDUSTRIES CO. , LTD	

Lot symbol :

Ex.) 0 5 0 7 1 T

- T : symbol of manufacturing factory
- Week of production : 1~6
- Month of production : 01~12
- Year : last digit of year 2005

(3) Dampproof packing

It is packed with aluminum pack to avoid moisture absorption during transportation and storage.

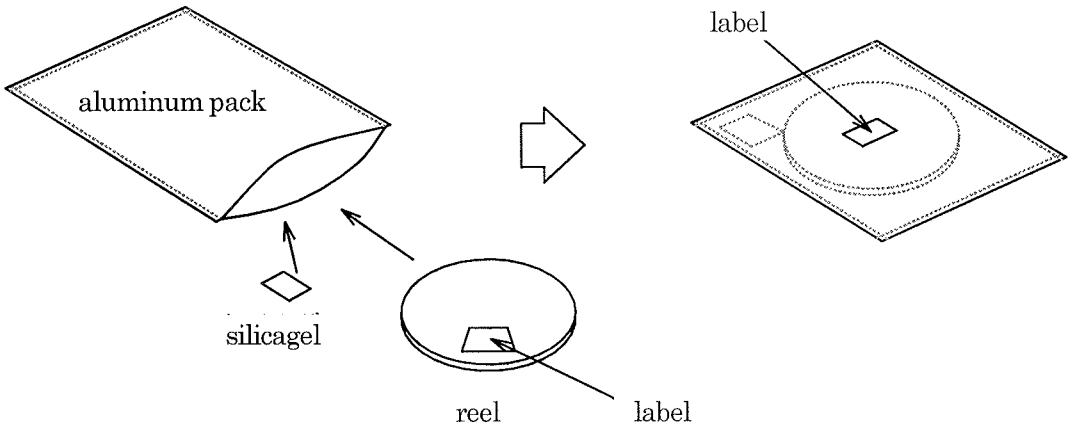

Storage condition

Please storage and control following condition after unpacked.

- It should be storage under the condition of humidity and temperature.
- Please storage in the dry box.
- Please storage and airtight with sealer, desiccant etc.
- Storage should avoid the place where it is possibly water leakage or direct rays hit.
- Please storage at the place where temperature is rarely change, since rapid change of temperature leads condensation and it may cause oxidation and corrosion.
- There should be no loading against the product during the storage.
- Storage should avoid the place where poisonous gad (especially corrosion gas) break out or dusty.

(4) Tape form and reference dimensions

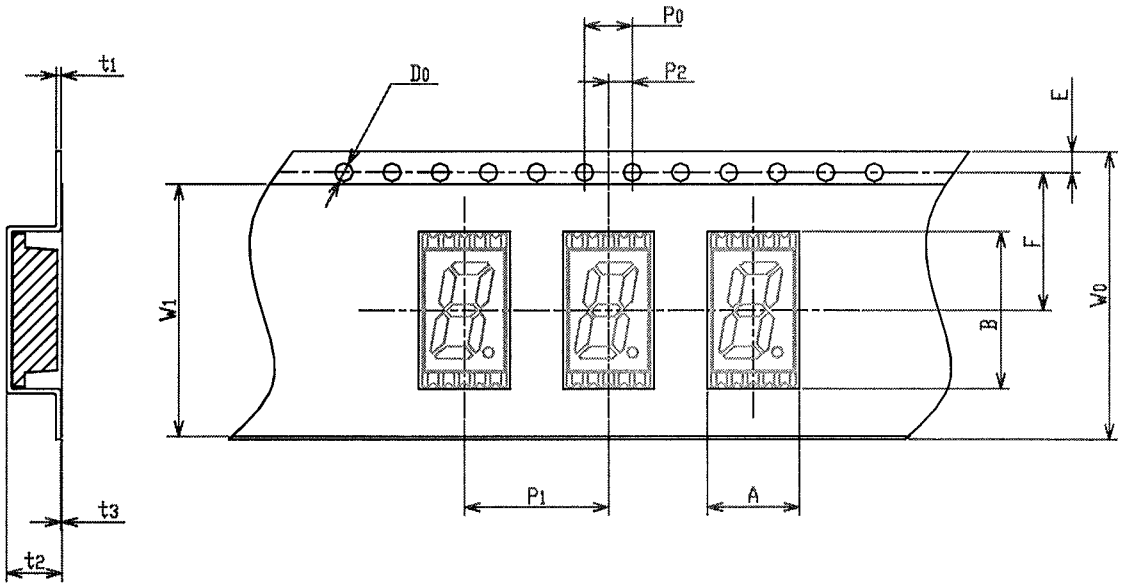

Item		symbol	dimensions (mm) (ref.)	Note
part insertion dent corner hole	length	A	7.6	except inside corner R
	breadth	B	13.1	except inside corner R
	pitch	P 1	12.0	
sending round hole	major axis	D0	1.5	
	pitch	P 0	4.0	cumulative tolerance ±0.5mm/10 pitch
	position	E	1.75	interval between the end of tape and center of sending round hole
interval between the center line	lengthwise direction	P 2	2.0	interval between the dent square hole and the center of sending round hole
	cross direction	F	11.5	interval between the dent square hole and the center of sending round hole
cover tape	width	W 1	21.0	
	thickness	t 3	0.1	
carrier tape	width	W 0	24.0	
	thickness	t 1	0.4	
total thickness		t 2	4.2	total of cover tape and carrier tape

※ material : Polystyrene

(5) Reel form and reference dimensions

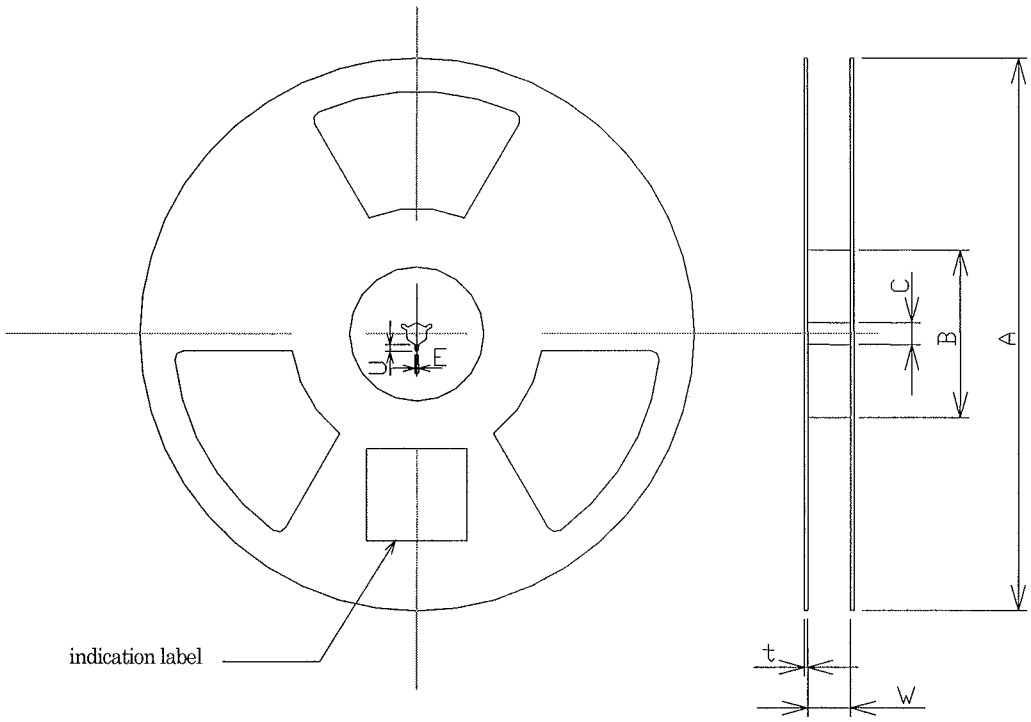

Item			symbol	dimensions (mm) (ref.)	Note
flange	diameter		A	φ330	
	thickness		t	2.0	
	inside interval of both flange		W	25.5	center axis
hub	ambient diameter		B	φ100	
	diameter of spindle hole		C	φ13	
	key ditch	width	E	2.0	
		depth	U	4.0	
indication of product name etc.			Attach a label to the one side of flange (product name, quantity and Lot No.)		

※ material : Polystyrene

10. PRECAUTIONS OF USE

(1) Re-flow soldering

①Package temperature should be under the following temperature profile condition. Even if it is under the temp. profile condition, if the pressure is added against the package by board corvature etc. it may cause inside package defective. Therefore, please use after fully confirming a production condition.

②Re-flow temperature profile

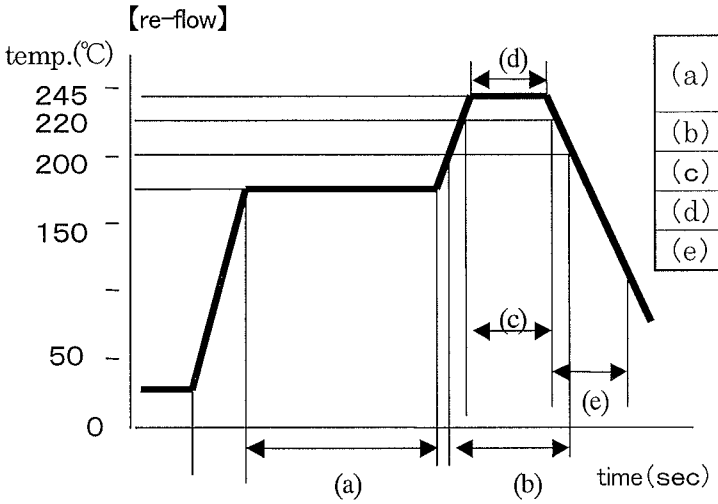

(a)	pre-heat	150℃～180℃ 60sec～120sec
(b)	heat	200℃ 40sec～60sec
(c)		220℃ 30sec～40sec
(d)	peak temp.	245℃ 5sec
(e)	cooling	compulsory cooling

※ Re-flow soldering should be done only one time, and please use attentively to the following points.

(2) As this product is not airtight type, please avoid dip washing (ultrasonic cleaning) in cleaning fluid.

(3) Use soft cloth with diluted alcohol when wiping off the spot attached to the LED surface and flux removal. Please wipe lightly and with fully attention to avoid alcohol soaking between board and case.

(4) Strong press should not be added against the segment of LED display unit or DP surface resin parts. It may become the cause of reliability decreasing.

(5) Mechanical stress should not be added against the LED display unit at the time of soldering.

(6) Epoxy resin is molded to surface of the LED display unit. If tiptoe, hard or sharp object got caught on the corner of the LED display unit, it may cause scratch.

(7) As this product is hollow type, it is fitted by caulk between case and board of the display. There should be no loading more than 1Kg or catching against the implemented display unit, it may leads out of joint of the case. Even if the shock is less than 1Kg, the shock in the high temperature at the time of soldering etc. may leads to disconnection of the chip and bonding part.

(8) The specification of this product and appearance may be changed for improvement etc. after mutual discussion.

11. TYPICAL ELECTRICAL AND OPTICAL CHARACTERISTICS

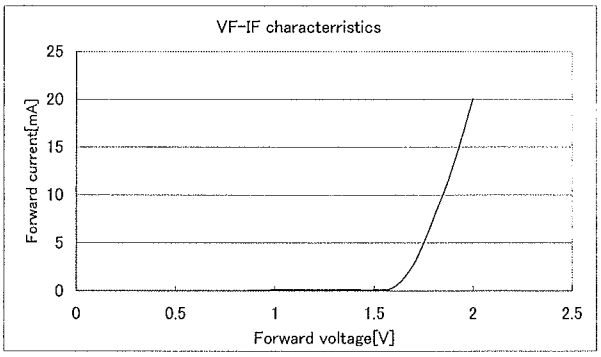

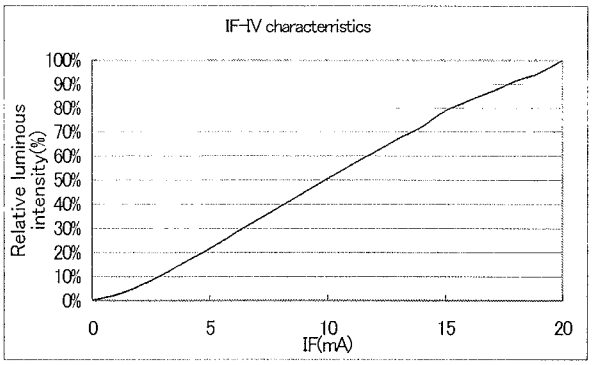

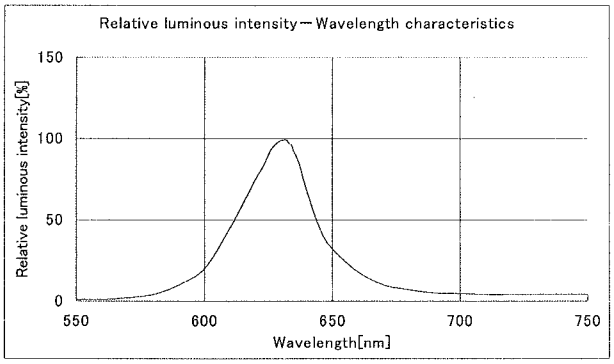

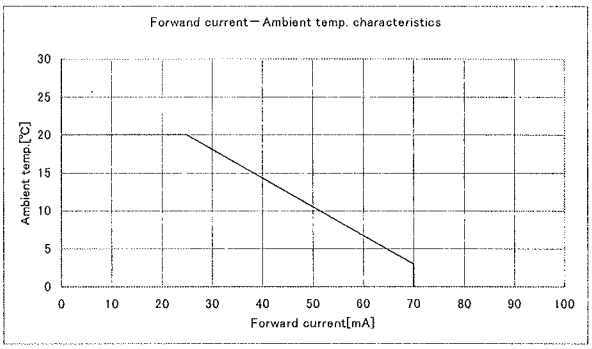

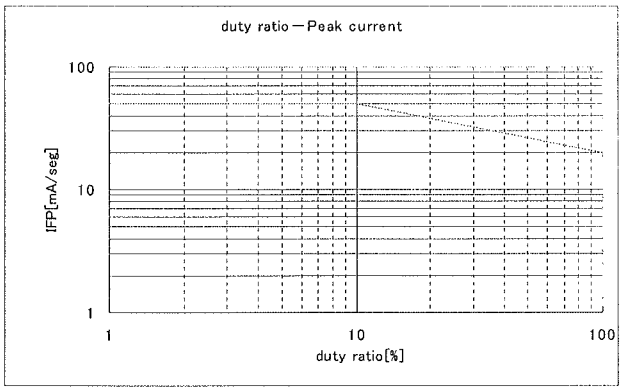

Ta=25℃

pulse width: : less than 10ms

duty ratio : less than 1/10

※Above data are normal values, and it is not a guarantee value.