UniOhm

C O N F I D E N T I A L D O C U M E N T

SPECIFICATION FOR APPROVAL

ROPLA

Description : Cement Fixed Resistors

Royalohm Part no.:

PRZDAWJP103B00 (PRZD 10W +/- 5% 10kΩ B/B)

Approved by

RoHS V3 Compliant (EU) 2015/863

REACH Compliant

Uniroyal Electronics Global., Ltd.
88th LongTeng Road, Economic & Technical Development
Zone, Kunshan, Jiangsu, China
Tel: +88 512 5763 1400 / 1411 / 1422 / 1433
Fax: +86 512 5763 4599
E-mail Address: Global sales : Globalsales@uniohm.com

http://www.uni-royal.cn

Approved	Checked	Prepared
Mr. XP Hong	Mr. S. Polthanasan	Ms. T. Chadaporn

Issue Date: 2022/05/20

CHANGE NOTIFICATION HISTORY			
Version	**Date of Version**	**History**	**Remark**
1	2022/05/20	1. Resistance Value: 10kΩ	
		- P for Powr film type	

Cement Fixed Resistors

1. Scope:

This specification for approval relates to Cement Fixed Resistors manufactured by UNIOHM 's specifications.

2. Type designation:

The type designation shall be in the following form:

(Ex.)	PRZD	10W	J	10kΩ
	Type	Power Rating	Resistance Tolerance	Nominal Resistance

3. Ratings:

Ratings shall be shown in the table 1.

Table 1

Type	PRZD
Rated Power	10W at 70℃
Rated Ambient Temp.	70 ℃
Operating Temp. Range	-55℃ ～ +155℃
Resistance Tolerance	± 5%
Wire-wound Resistance Range	10kΩ

3.1 Power rating:

Resistors shall have a power rating based on continuous full load operation at an ambient temperature of 70 ℃

3.2 Voltage rating:

Resistors shall have a rated direct-current (DC) continuous working voltage or an approximate sine-wave root-mean-square (RMS) alternating-current (AC) continuous working voltage at commercial line frequency and waveform curresponding to the power rating , as determined from the following formula:

$$RCWV = \sqrt{P \times R}$$

Note : Max. Working Voltage or $\sqrt{P \times R}$ whichever is lesser

Max. Overload Voltage or $2.5\sqrt{P \times R}$ whichever is lesser

Were : RCWV = Rated DC or RMS AC continuous working voltage at commercial-line frequency and waveform (volt)

P = Power Rating (watt)

R = Nominal Resistance (ohm)

Cement Fixed Resistors

Heat Rise Chart

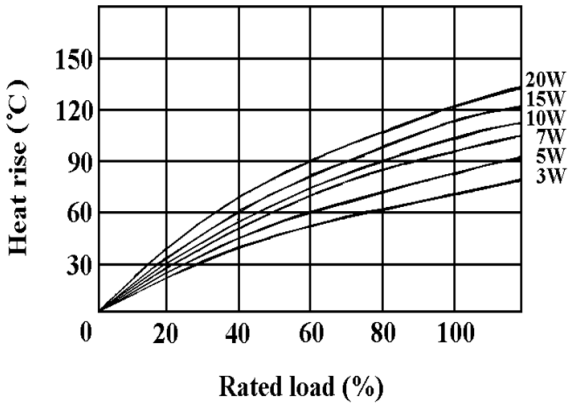

Derating Curve

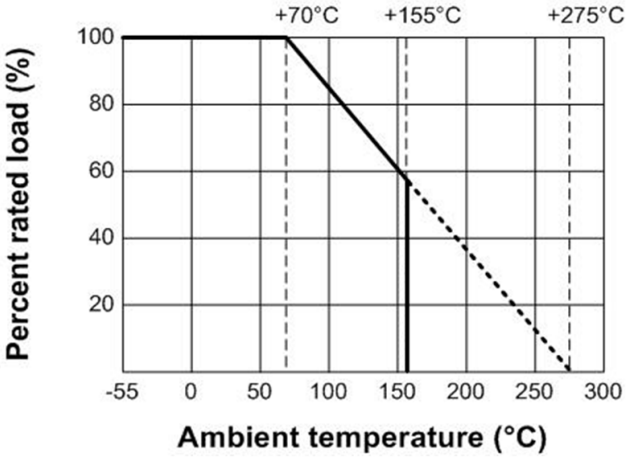

4. Construction:

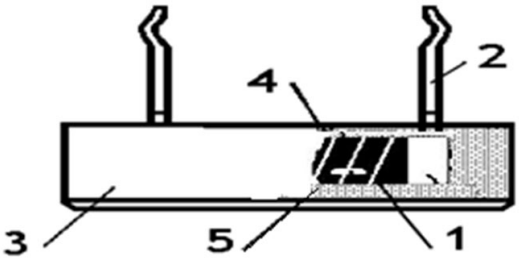

Cement: Power Film Type

Confirmation List of Material

No.	Subpart Name	Material	Material Generic Name	Remark
1	Body	Rod Type Ceramics	Al_2O_3, SiO_2	
2	Terminal lead	Terminal cap plated with Tin	Fe : 73%, Mn : 21%, C : 5%	
3	Ceramic Case	Ceramic	Al_2O_3, SiO_2	
4	Resistance element	Metal Oxide Film	Metal Oxide Film	
5	Filling Materials	Quartz mixed sand	SiO_2	

Cement Fixed Resistors

5. Characteristic :

Characteristics	Limits	Test Methods (JIS C 5201-1)
Dielectric withstanding voltage	No evidence of flashover, mechanical damage, arcing or insulation break down	Resistors shall be clamped in the trough of a 90° metallic V-block and shall be tested at AC potential respectively for 60 +10/ -0 secs. (Sub-clause 4.7)
Temperature coefficient	± 350 PPM/°C Max.	Natural resistance change per temp. degree centigrade. $\frac{R_2-R_1}{R_1(t_2-t_1)} \times 10^6$ (PPM/°C) R_1: Resistance value at room temperature (t1) R_2: Resistance value at room temp. plus 100 °C (t_2) (Sub-clause 4.8)
Short time overload	Resistance change rate is ± (5% + 0.05Ω) Max. with no evidence of mechanical damage	Permanent resistance change after the application of a potential of 2.5 times RCWV for 5 seconds (Sub-clause 4.13)
Terminal strength	No evidence of mechanical damage	**Direct load** : Resistance to a 2.5 kgs direct load for 10 secs. in the direction of the longitudinal axis of the terminal leads **Twist test :** Terminal leads shall be bent through 90 ° at a point of about 6mm from the body of the resistor and shall be rotated through 360° about the original axis of the bent terminal in alternating direction for a total of 3 rotations (Sub-clause 4.16)
Solderability	95 % coverage Min.	The area covered with a new , smooth clean , shiny and continuous surface free from concentrated pinholes. Test temp. of solder : 245°C ± 5°C Dwell time in solder : 2 to 3 secs. (Sub-clause 4.17)
Soldering temp. reference	Electrical characteristics shall be satisfied. Without distinct deformation in appearance. (95 % coverage Min.)	The leads immersed into solder bath to 3.2 to 4.8 mm. from the body. Permanent resistance change shall be checked. <u>Wave soldering condition: (2 cycles Max.)</u> Pre-heat : 100 ~ 120 ℃, 30 ± 5 sec. Suggestion solder temp.: 235 ~ 255 ℃, 10 sec. (Ma Peak temp.: 260 °C <u>Hand soldering condition:</u> Hand Soldering bit temp. : 380 ± 10 °C Dwell time in solder : 3 +1/-0 sec.

Cement Fixed Resistors

Characteristics	Limits	Test Methods (JIS C 5201-1)
Resistance to soldering heat	Resistance change rate is ± (1% + 0.05Ω) Max. with no evidence of mechanical damage	Permanent resistance change when leads immersed to 3.2 to 4.8 mm from the body in 350℃ ± 10 ℃ solder for 3 ± 0.5 secs. (Sub-clause 4.18)
Temperature cycling	Resistance change rate is ± (2% + 0.05Ω) Max. with no evidence of mechanical damage	Resistance change after continuous 5 cycles for duty shown below:

Step	Temperature	Time
1	-55℃ ± 3℃	30 mins
2	Room temp.	10～15 mins
3	+155℃ ± 2℃	30 mins
4	Room temp.	10～15 mins

(Sub-clause 4.19)

Load life in humidity	Resistance value	ΔR/R
	Power film	± 5%

Resistance change after 1,000 hours operating at RCWV with duty cycle of (1.5 hours "on", 0.5 hour "off") in a humidity test chamber controlled at 40 ℃ ± 2 ℃ and 90 to 95 % relative humidity (Sub-clause 4.24.2.1)

Load life	Resistance value	ΔR/R
	Power film	± 5%

Permanent resistance change after 1,000 hours operating at RCWV with duty cycle of (1.5 hours "on", 0.5 hour "off") at 70℃ ± 2℃ ambient (Sub-clause 4.25.1)

Cement Fixed Resistors

6. Dimension :

Unit : mm

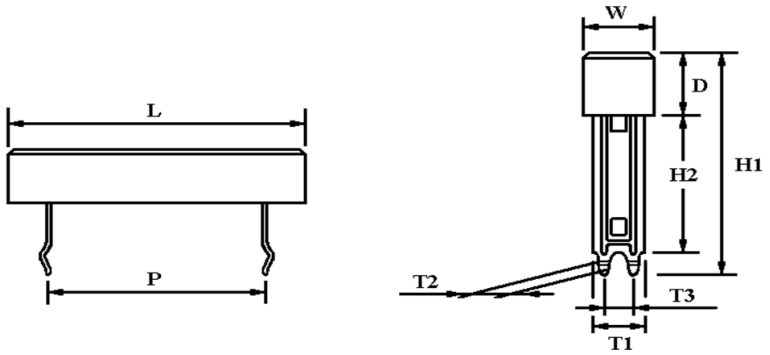

Type	Rating Wattage	W ± 1	D ± 1	L	P ± 1.5	T_1 ± 1	T_2 ± 0.2	T_3 ± 0.5	H_1 + 2 - 1	H_2 + 2 - 1
PRZD	10W	10	9	48±1.5	32	7	1.5	3.5	24	10

7.Marking :

Ex.

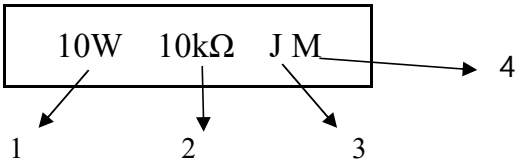

Code description and regulation

1. Wattage rating.
2. Nominal resistance value.
3. Resistance tolerance.
4. W marking for Wire wound type
   M marking for Power film type

J : ± 5 % K : ± 10 %

Color of marking: Black ink

Part Number System

Explanation of Part Number System
(Cement Fixed Resistors)

1	2	3	4	5	6	7	8	9	10	11	12	13	14
P	R	Z	D	A	W	J	P	1	0	3	B	0	0

Resistor Type:
- PRW0 = PRW
- PRWA = PRWA
- PRWC = PRWC
- PRM0 = PRM
- PRMA = PRMA
- PRMB = PRMB
- PRS0 = PRS
- PRT0 = PRT
- PRU0 = PRU
- PZ1A = PRZA-1
- PZ2A = PRZA-2
- PZ3A = PRZA-3
- PRZC = PRZC
- PRZD = PRZD
- PRVA = PRVA
- PRVB = PRVB

Wattage:
- 1W = 1W
- 2W = 2W
- 3W = 3W
- 4W = 4W
- 5W = 5W
- 7W = 7W
- AW = 10W
- BW = 11W
- FW = 15W
- HW = 17W
- 20 = 20W
- 25 = 25W
- 30 = 30W
- 40 = 40W

Tolerance:
- J ~ ± 5%
- K ~ ± 10%

Resistance Value:

E-24 series: the 1st digit to denote production type of the product:

W = Wire wound type

P = Power film type

The 2nd and 3rd digits are for the significant figures of the resistance and the 4th digit denote number of zeros following

Decimal point is expressed by:

"J" ~ 0.1, "K" ~ 0.01

Ex.: 4.7Ω ~ 47J, 4.7KΩ ~ 472

Packing Type:
- B = Bulk /Box

Packing Quantity:
- 0 = Bulk/Box

Special Feature:
- 0 = Standard
- I = Non-Inductive

Sample: PRZD 10W +/- 5% 10kΩ B/B (Power film) → PRZDAWJP103B00

Cement Fixed Resistors

Environment Related Substance

This product complies to EU RoHS directive, EU PAHs directive, EU PFOS directive and Halogen free.

Ozone layer depleting substances.

Ozone depleting substances are not used in our manufacturing process of this product.
This product is not manufactured using Chloro fluorocarbons (CFCs), Hydrochlorofluorocarbons (HCFCs), Hydrobromofluorocarbons (HBFCs) or other ozone depleting substances in any phase of the manufacturing process.

Storage Condition (MSL1)

The performance of these products, including the solderability, is guaranteed for a year from the date of arrival at your company, provided that they remain packed as they were when delivered and stored at a temperature of 25°C ± 5°C and a relative humidity of 60%RH ± 10%RH

Even within the above guarantee periods, do not store these products in the following conditions. Otherwise, their electrical performance and/or solderability may be deteriorated, and the packaging materials (e.g. taping materials) may be deformed or deteriorated, resulting in mounting failures.

1. In salty air or in air with a high concentration of corrosive gas, such as Cl_2, H_2S, NH_3, SO_2, or NO_2
2. In direct sunlight

Cement Fixed Resistors

Legal Disclaimer

The information provided in the catalog/data sheet is for the purpose of describing product specifications only, and UNIOHM and its affiliates (hereinafter collectively referred to as "UNIOHM") hereby disclaim any liability for any errors, inaccuracies or incompleteness contained in any product-related information (including but not limited to product specifications, datasheets, pictures, graphics).
UNIOHM reserves the right to modify this content without prior notice. Thank you for your understanding.

UNIOHM makes no representation, warranty, and guarantee as to the fitness of its products for any particular purpose or the continuing production of any UNIOHM products.
To the maximum extent permitted by law, UNIOHM disclaims
(i) any and all liability arising out of the application or use of any UNIOHM product,
(ii) any and all liability, including without limitation special, consequential or incidental damages, and
(iii) any and all implied warranties, including warranties of fitness for a particular purpose, non-infringement and merchantability.

UNIOHM products are not intended for use in medical, life-saving, or life-sustaining equipment, nor are they intended for any other purpose where product failure or mismanagement could endanger life or cause harm to or death to the human body. Customers use or sell UNIOHM products for the above purposes at their own risk. If need products for such purposes, please be sure to consult with our company to obtain relevant information about the applicable products.

Regardless of the application of UNIOHM products, it is recommended to carry out safety tests while using measures such as protective circuits and redundant circuits to protect the safety of equipment.