UniOhm

C O N F I D E N T I A L D O C U M E N T

SPECIFICATION FOR APPROVAL

ROPLA ELEKTRONIK

Description : Wire-Wound Fixed Resistors (AEC-Q200 Compliant)

UniOhm Part no.:

KNP03SJ0271A19 (KNP 3W-S +/- 5% 270Ω T/B-1,000)

Approved by

RoHS V3 Compliant (EU) 2015/863

REACH Compliant

Uniroyal Electronics Global., Ltd.
88th LongTeng Road, Economic & Technical Development
Zone, Kunshan, Jiangsu, China
Tel: +88 512 5763 1400 / 1411 / 1422 / 1433
Fax: +86 512 5763 4599
E-mail Address: Global sales : Globalsales@uniohm.com

http://www.uni-royal.cn

Approved	Checked	Prepared
Mr. XP Hong	Mr. S. Polthanasan	Ms. P.Supatta

Issue Date: 2022/04/09

CHANGE NOTIFICATION HISTORY			
Version	**Date of Version**	**History**	**Remark**
1	2022/04/09	1. Resistance Value : 270Ω	
		2. Finished size: 5.5mm x 16.0mm	
		3. Lead wire diameter: 0.70 ± 0.05 (Unit: mm)	
		4. Pitch of Tape(PT): 64mm	

Wire-Wound Fixed Resistors (AEC-Q200 Compliant)

1. Scope:

This specification for approval relates to Wire-Wound Fixed Resistors (AEC-Q200 Compliant) manufactured by UniOhm 's specifications.

2. Type designation:

The type designation shall be in the following form :

(Ex.)	KNP	3W-S	J	270Ω
	Type	Power Rating	Resistance Tolerance	Nominal Resistance

3. Ratings:

Ratings shall be shown in the table 1.

Table 1

Type	KNP
Rated Power	3 W at 70℃
Max. Working Current	28.46 V
Max. Overload Current	71.15 V
Dielectric Withstanding Voltage	500 V
Rated Ambient Temp.	70 ℃
Operating Temp. Range	-55℃ --- +155℃
Resistance Tolerance	± 5 %
Resistance Value	270Ω

3.1 Power rating:

Resistors shall have a power rating based on continuous full load operation at an ambient temperature of 70 ℃. For temperature in excess of 70 ℃ , the load shall be derated as shown in the figure 1.

3.2 Current rating:

Resistors shall have a rated direct-current (DC) continuous working Current or an approximate sine-wave root-mean-square (RMS) alternating-current (AC) continuous working Current at commercial-line frequency and waveform corresponding to the power rating , as determined from the following formula :

$$RCWC = \sqrt{P / R}$$

Note : Max. Working Voltage or $\sqrt{P \times R}$ whichever is lesser

Max. Overload Voltage or $2.5\sqrt{P \times R}$ whichever is lesser

Were : RCWC = Rated DC or RMS AC continuous working current at commercial-line frequency and waveform (A)

P = Power Rating (watt)

R = Nominal Resistance (ohm)

Wire-Wound Fixed Resistors (AEC-Q200 Compliant)

In no case shall the rated DC or RMS AC continuous working voltage be greater than the applicable maximum value

Figure 1.

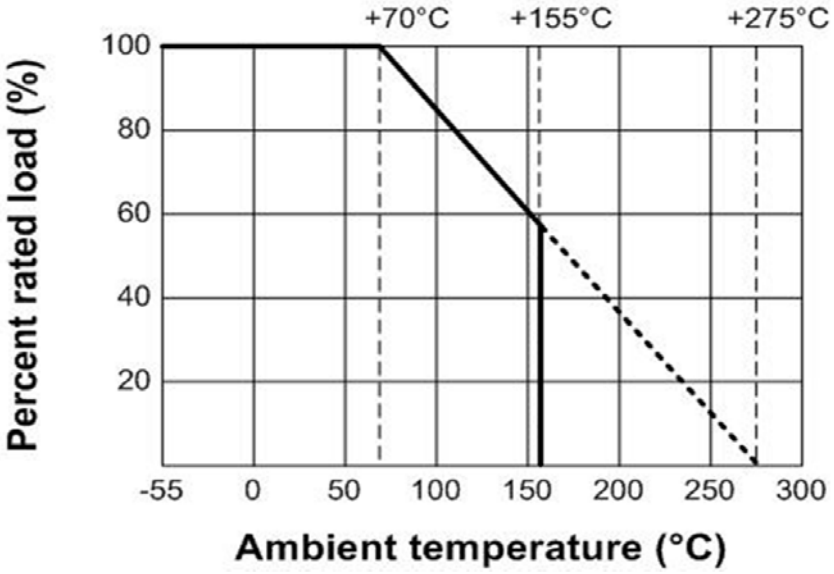

3.3 Nominal resistance :

Effective figures of nominal resistance shall be in accordance with E-24 series, and resistance tolerance shall be shown by table 1.

4. Construction :

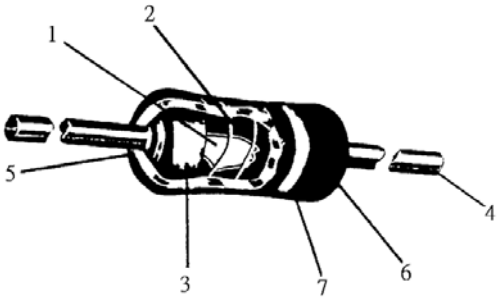

No.	Name	Material
1	Basic Body	Rod Type Ceramics
2	Resistance Wire	Resistance Wire Alloy
3	End Cap	Steel (Tin plated iron surface)
4	Lead Wire	Annealed copper wire coated with tin
5	Joint	By Welding
6	Coating	Insulated & Non-Flame paint (Color : Green)
7	Color Code	Non-Flame Epoxy Resin

Wire-Wound Fixed Resistors (AEC-Q200 Compliant)

5. Characteristics :

Characteristics	Limits	Test Methods (AEC-Q200)
Pre- and Post- stress electrical test	_____	Test is performed except as specified in the applicable stress reference and the additional requirements in Table 7.
High Temperature Exposure (Storage)	Resistance change rate is ± (5% + 0.1Ω)max	1000 hrs. @ T=125°C. Unpowered. Measurement at 24±2 hours after test conclusion.
Temperature cycling	Resistance change rate is ± (5% + 0.05Ω) Max. with no evidence of mechanical damage	1000 Cycles (-55°C to +125°C) Measurement at 24±2 hours after test conclusion.
Moisture resistance	Resistance change rate is ± (5% + 0.05Ω) Max.	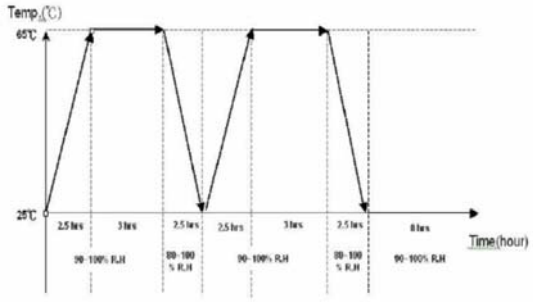 t= 24 hours/cycle. Note: Steps 7a & 7b not required. Unpowered. Measurement at 24±2 hours after test conclusion.
Biased Humidity	Resistance change rate is ± (5% + 0.1Ω) Max.	1000 hours 85°C/85%RH. Note: Specified conditions:10% of operating power. Measurement at 24±2 hours after test conclusion.
Operational Life	Resistance change rate is ± (5% + 0.1Ω)max	Condition D Steady State TA=125°C at rated power. Measurement at 24±2 hours after test conclusion.
External Visual	_____	Electrical test not required. Inspect device construction, marking and workmanship.
Physical Dimension	_____	Verify physical dimensions to the applicable device detail spec. Note: User(s) and Suppliers spec.Electrical test not required.
Terminal Strength (Leaded)	No evidence of mechanical damage	Test leaded device lead integrity only. Conditions: A (2.27 kg), C (227 g), E (1.45 kg-mm)
Resistance to Solvents	No deterioration of protective coatings and markings	Note: Add Aqueous wash chemical - OKEM Clean or equivalent. Do not use banned solvents.

Wire-Wound Fixed Resistors (AEC-Q200 Compliant)		
Characteristics	Limits	Test Methods (AEC-Q200)
Mechanical Shock	± (1% + 0.05Ω) Max.	Wave Form: Tolerance for half sine shock pulse.Peak value is 100g's. Normal duration (D) is 6. (MIL-STD-202 Method 213)
Vibration	Resistance change rate is ± (1% + 0.05Ω) Max.	5 g's for 20 min., 12 cycles each of 3 orientations.Note: Use 8"X5" PCB .031" thick 7 secure points on one long side and 2 secure points at corners of opposite sides. Parts mounted within 2" from any secure point. Test from 10-2000 Hz.
Resistance to Soldering Heat	Resistance change rate is ± (1% + 0.05Ω) Max. with no evidence of mechanical damage	No pre-heat of samples. Single Wave Solder
Thermal Shock	± (5% + 0.05Ω) Max.	-55°C/+125°C. Note: Number of cycles required-300, Maximum transfer time-20 seconds, Dwell time-15 minutes. Air-Air.
Solderability	95 % coverage Min.	For both Leaded & SMD. Electrical test not required. Magnification 50 X. Conditions:Leaded: Method A @ 235°C, category 3.
Electrical Characterization	Resistance change rate is ± (1% + 0.1Ω) Max.	Parametrically test per lot and sample size requirements, summary to show Min, Max, Mean and Standard deviation at room as well as Min and Max operating temperatures.
Flammability	———	UL-94 V-0 or V-1 are acceptable. Electrical test not required.
Flame Retardance	No flame and no Explosion	Voltage power subjected to 32VDC current clamped up to 500ADC and decreased in 1.0VDC/hour. Failure if: a) A Flame over 3s. b) An explosion c) A temp over 350°C over 10s

Wire-Wound Fixed Resistors (AEC-Q200 Compliant)

6. Dimension : Unit : mm

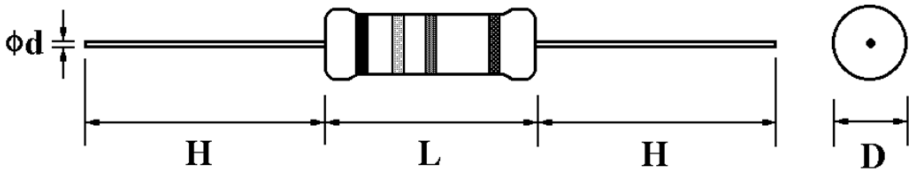

Type	Power Rating	D ± 1	L ± 1	d ± 0.05	H ± 3
KNP	3 W-S	5.5 mm	16.0 mm	0.70 mm	28 mm

Painting method:

Welding point, terminal and lead wire, is permissible to be exposed without the outer coated cover. The extent should be within 1/2 of the are angle.

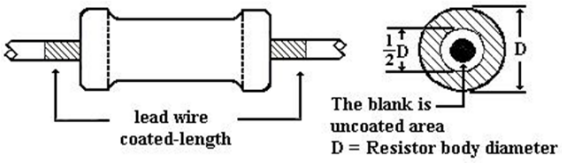

7. Marking :

7.1 Resistor :

Resistors shall be marked with color coding

colors shall be in accordance with JIS C 0802

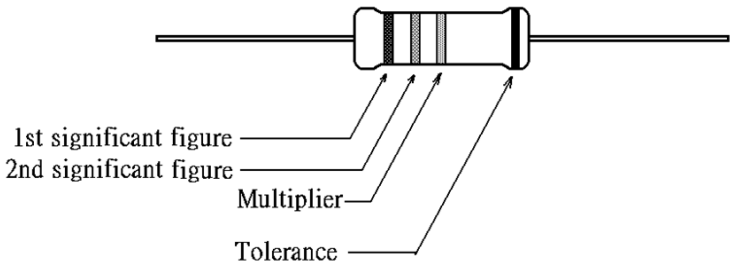

7.2 Label :

Label shall be marked with following items:

(1) Type and style
(2) Nominal resistance
(3) Resistance tolerance
(4) Quantity
(5) Lot number
(6) PPM

Example :

Wire-Wound Fixed Resistors

Watt	:	3W-S	Val	:	270R
Q'TY	:	1,000	Tol	:	5%
Lot	:	709012	PPM	:	300
		UniOhm			Pb Free

Wire-Wound Fixed Resistors (AEC-Q200 Compliant)

8. Packing specification :

8.1 Taping dimension :

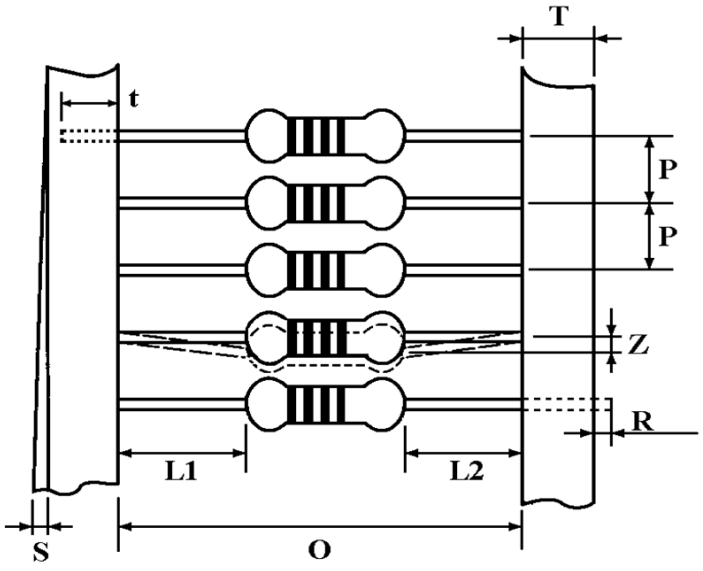

Dimensions (mm)

Type	Style	O	P	L_1-L_2	T	Z	R	t	S
KNP-300-S	PT-64	64 ± 1	10 ± 0.5	1 Max.	6 ± 1	1 Max.	0	5 ± 1	0.5 Max.

8.2 Tape in box packing :

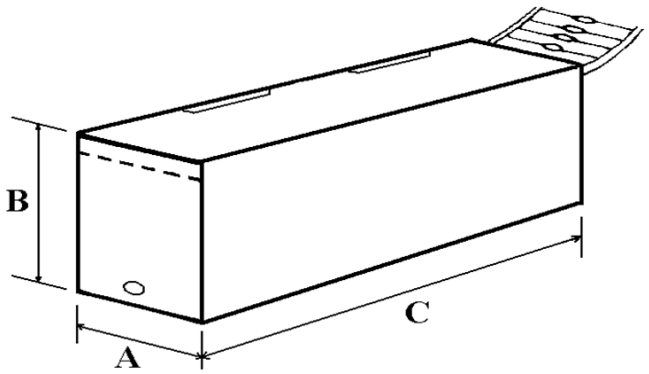

Bandoliers may also be contained in a cardboard box ("Ammopack")

Dimension (mm)

Type	Style	L (C) ± 5	W (A) ± 5	H (B) ± 5	Quantity Per Box (pcs.)
KNP-300-S	PT- 64	262	92	108	1,000

"Ammopack" is an abbreviation of "ammunition pack"

Wire-Wound Fixed Resistors (AEC-Q200 Compliant)

8.3 Tape on reel packing :

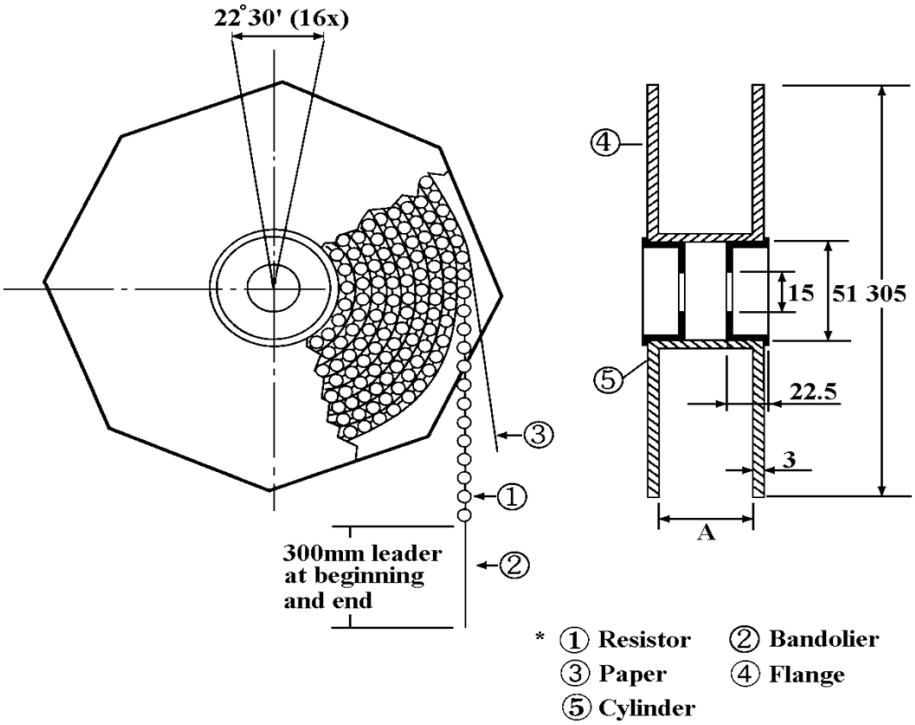

Dimension (mm) :

Type	Style	Across Flange (A)	Quantity Per Reel
KNP-300-S	PT- 64	81 ± 5	1,000 pcs.

Part Number System

Explanation of Part Number System

Wire-Wound Fixed Resistors (AEC-Q200 Compliant)

1	2	3	4	5	6	7	8	9	10	11	12	13	14
K	N	P	0	3	S	J	0	2	7	1	A	1	9

Product Type:

KNP = KNP Type

Tolerance:

F ~ ± 1%

G ~ ± 2%

J ~ ± 5%

K ~ ± 10%

Packing Type:

A = Tape/Box

T = Tape/Reel

B = Bulk/Box

Special Feature:

0 = Standard Product

I = Non-Inductive Product

Resistance Value:

E-24 series: the 1st digit is"0", the 2nd & 3rd digits are for the significant figures of the resistance and the 4th indicate the number of zeros following:

"J" ~ 0.1, "K" ~ 0.01

Ex.: 4.7Ω ~ 47J, 4.7KΩ ~ 472

E--96 Series: the 1st to 3rd digits are significant figures of resistance and the fourth one denotes number of zeros following:

Ex.: 1.33KΩ = 1331

Packing Quantity:

1 = 1,000pcs

2 = 2,000pcs

A = 500pcs

B = 2,500pcs

0 = for Bulk/Box packing

Wattage:

Normal size:	Small size:
W2 = 1/2W	1S = 1W-S
1W = 1W	2S = 2W-S
2W = 2W	3S = 3W-S
3W = 3W	4S = 4W-S
5W = 5W	5S = 5W-S
6W = 6W	6S = 6W-S
7W = 7W	7S = 7W-S
8W = 8W	8S = 8W-S
9W = 9W	9S = 9W-S
AW = 10W	AS = 10W-S

Extra Small size:

3U = 3W-SS

Addition Information:

0 = PT-52mm

8 = PT-58mm

9 = PT-64mm

Sample: KNP 3W-S +/- 5% 270Ω T/B-1,000 → KNP03SJ0271A19

Wire-Wound Fixed Resistors (AEC-Q200 Compliant)

Environment Related Substance

This product complies to EU RoHS directive, EU PAHs directive, EU PFOS directive and Halogen free.

Ozone layer depleting substances.

Ozone depleting substances are not used in our manufacturing process of this product.
This product is not manufactured using Chloro fluorocarbons (CFCs), Hydrochlorofluorocarbons (HCFCs), Hydrobromofluorocarbons (HBFCs) or other ozone depleting substances in any phase of the manufacturing process.

Storage Condition (MSL1)

The performance of these products, including the solderability, is guaranteed for a year from the date of arrival at your company, provided that they remain packed as they were when delivered and stored at a temperature of 25°C ± 10°C and a relative humidity of 60%RH ± 10%RH, chemical and dust free atmosphere

Even within the above guarantee periods, do not store these products in the following conditions. Otherwise, their electrical performance and/or solderability may be deteriorated, and the packaging materials (e.g. taping materials) may be deformed or deteriorated, resulting in mounting failures.

1. In salty air or in air with a high concentration of corrosive gas, such as Cl_2, H_2S, NH_3, SO_2, or NO_2
2. In direct sunlight