National Semiconductor

January 1995

DAC0808/DAC0807/DAC0806 8-Bit D/A Converters

General Description

The DAC0808 series is an 8-bit monolithic digital-to-analog converter (DAC) featuring a full scale output current settling time of 150 ns while dissipating only 33 mW with ±5V supplies. No reference current (I_{REF}) trimming is required for most applications since the full scale output current is typically ±1 LSB of 255 I_{REF}/ 256. Relative accuracies of better than ±0.19% assure 8-bit monotonicity and linearity while zero level output current of less than 4 μA provides 8-bit zero accuracy for $I_{REF} \geq 2$ mA. The power supply currents of the DAC0808 series are independent of bit codes, and exhibits essentially constant device characteristics over the entire supply voltage range.

The DAC0808 will interface directly with popular TTL, DTL or CMOS logic levels, and is a direct replacement for the MC1508/MC1408. For higher speed applications, see DAC0800 data sheet.

Features

- Relative accuracy: ±0.19% error maximum (DAC0808)
- Full scale current match: ±1 LSB typ
- 7 and 6-bit accuracy available (DAC0807, DAC0806)
- Fast settling time: 150 ns typ
- Noninverting digital inputs are TTL and CMOS compatible
- High speed multiplying input slew rate: 8 mA/μs
- Power supply voltage range: ±4.5V to ±18V
- Low power consumption: 33 mW @ ±5V

Block and Connection Diagrams

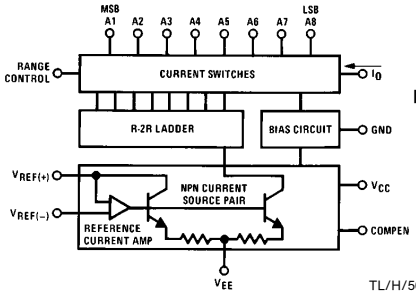

TL/H/5687–1

Order Number DAC0808, DAC0807, or DAC0806 See NS Package Number J16A, M16A or N16A

Dual-In-Line Package

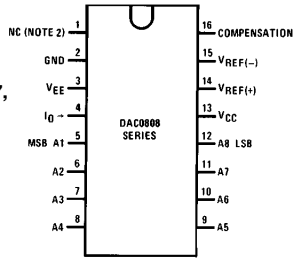

TL/H/5687–2

Small-Outline Package

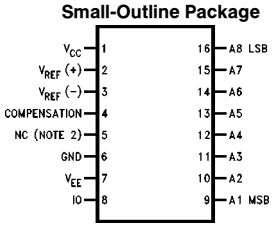

TL/H/5687–13

Top View

Ordering Information

ACCURACY	OPERATING TEMPERATURE RANGE	ORDER NUMBERS				
		J PACKAGE (J16A)*		N PACKAGE (N16A)*		SO PACKAGE (M16A)
				DAC0808LCN	MC1408P8	DAC0808LCM
7-bit	0°C ≤ T_A ≤ +75°C	DAC0807LCJ	MC1408L7	DAC0807LCN	MC1408P7	DAC0807LCM
6-bit	0°C ≤ T_A ≤ +75°C	DAC0806LCJ	MC1408L6	DAC0806LCN	MC1408P6	DAC0806LCM

*__Note.__ Devices may be ordered by using either order number.

©1995 National Semiconductor Corporation

RRD-B30M115/Printed in U. S. A.

Absolute Maximum Ratings (Note 1)

If Military/Aerospace specified devices are required, please contact the National Semiconductor Sales Office/Distributors for availability and specifications.

Power Supply Voltage	
V_{CC}	$+18\ V_{DC}$
V_{EE}	$-18\ V_{DC}$
Digital Input Voltage, V5–V12	$-10\ V_{DC}$ to $+18\ V_{DC}$
Applied Output Voltage, V_O	$-11\ V_{DC}$ to $+18\ V_{DC}$
Reference Current, I_{14}	5 mA
Reference Amplifier Inputs, V14, V15	V_{CC}, V_{EE}
Power Dissipation (Note 3)	1000 mW
ESD Susceptibility (Note 4)	TBD
Storage Temperature Range	$-65°C$ to $+150°C$
Lead Temp. (Soldering, 10 seconds)	
Dual-In-Line Package (Plastic)	260°C
Dual-In-Line Package (Ceramic)	300°C
Surface Mount Package	
Vapor Phase (60 seconds)	215°C
Infrared (15 seconds)	220°C

Operating Ratings

Temperature Range	$T_{MIN} \le T_A \le T_{MAX}$
DAC0808LC Series	$0 \le T_A \le +75°C$

Electrical Characteristics

($V_{CC} = 5V$, $V_{EE} = -15\ V_{DC}$, $V_{REF}/R14 = 2$ mA, DAC0808: $T_A = -55°C$ to $+125°C$, DAC0808C, DAC0807C, DAC0806C, $T_A = 0°C$ to $+75°C$, and all digital inputs at high logic level unless otherwise noted.)

Symbol	Parameter	Conditions	Min	Typ	Max	Units
E_r	Relative Accuracy (Error Relative to Full Scale I_O)	*(Figure 4)*				%
	DAC0808LC (LM1408-8)				**±0.19**	%
	DAC0807LC (LM1408-7), (Note 5)				±0.39	%
	DAC0806LC (LM1408-6), (Note 5)				±0.78	%
	Settling Time to Within ½ LSB (Includes t_{PLH})	$T_A = 25°C$ (Note 6), *(Figure 5)*		150		ns
t_{PLH}, t_{PHL}	Propagation Delay Time	$T_A = 25°C$, *(Figure 5)*		30	100	ns
TCI_O	Output Full Scale Current Drift			±20		ppm/°C
MSB	Digital Input Logic Levels	*(Figure 3)*				
V_{IH}	High Level, Logic "1"		2			V_{DC}
V_{IL}	Low Level, Logic "0"				0.8	V_{DC}
MSB	Digital Input Current	*(Figure 3)*				
	High Level	$V_{IH} = 5V$		0	0.040	mA
	Low Level	$V_{IL} = 0.8V$		−0.003	−0.8	mA
I_{15}	Reference Input Bias Current	*(Figure 3)*		−1	−3	μA
	Output Current Range	*(Figure 3)*				
		$V_{EE} = -5V$	0	2.0	2.1	mA
		$V_{EE} = -15V$, $T_A = 25°C$	0	2.0	4.2	mA
I_O	Output Current	$V_{REF} = 2.000V$, $R14 = 1000\Omega$,				
		(Figure 3)	1.9	1.99	2.1	mA
	Output Current, All Bits Low	*(Figure 3)*		0	4	μA
	Output Voltage Compliance (Note 2)	$E_r \le 0.19\%$, $T_A = 25°C$				
	$V_{EE} = -5V$, $I_{REF} = 1$ mA				−0.55, +0.4	V_{DC}
	V_{EE} Below −10V				−5.0, +0.4	V_{DC}

Electrical Characteristics (Continued)

(V_{CC} = 5V, V_{EE} = −15 V_{DC}, $V_{REF}/R14$ = 2 mA, DAC0808: T_A = −55°C to +125°C, DAC0808C, DAC0807C, DAC0806C, T_A = 0°C to +75°C, and all digital inputs at high logic level unless otherwise noted.)

Symbol	Parameter	Conditions	Min	Typ	Max	Units
SRI_{REF}	Reference Current Slew Rate	*(Figure 6)*	4	8		mA/μs
	Output Current Power Supply Sensitivity	$-5V \le V_{EE} \le -16.5V$		0.05	2.7	μA/V
	Power Supply Current (All Bits Low)	*(Figure 3)*				
I_{CC}				2.3	22	mA
I_{EE}				−4.3	−13	mA
	Power Supply Voltage Range	T_A = 25°C, *(Figure 3)*				
V_{CC}			4.5	5.0	5.5	V_{DC}
V_{EE}			−4.5	−15	−16.5	V_{DC}
	Power Dissipation					
	All Bits Low	V_{CC} = 5V, V_{EE} = −5V		33	170	mW
		V_{CC} = 5V, V_{EE} = −15V		106	305	mW
	All Bits High	V_{CC} = 15V, V_{EE} = −5V		90		mW
		V_{CC} = 15V, V_{EE} = −15V		160		mW

Note 1: Absolute Maximum Ratings indicate limits beyond which damage to the device may occur. DC and AC electrical specifications do not apply when operating the device beyond its specified operating conditions.

Note 2: Range control is not required.

Note 3: The maximum power dissipation must be derated at elevated temperatures and is dictated by T_{JMAX}, θ_{JA}, and the ambient temperature, T_A. The maximum allowable power dissipation at any temperature is $P_D = (T_{JMAX} - T_A)/\theta_{JA}$ or the number given in the Absolute Maixmum Ratings, whichever is lower. For this device, T_{JMAX} = 125°C, and the typical junction-to-ambient thermal resistance of the dual-in-line J package when the board mounted is 100°C/W. For the dual-in-line N package, this number increases to 175°C/W and for the small outline M package this number is 100°C/W.

Note 4: Human body model, 100 pF discharged through a 1.5 kΩ resistor.

Note 5: All current switches are tested to guarantee at least 50% of rated current.

Note 6: All bits switched.

Note 7: Pin-out numbers for the DAL080X represent the dual-in-line package. The small outline package pinout differs from the dual-in-line package.

Typical Application

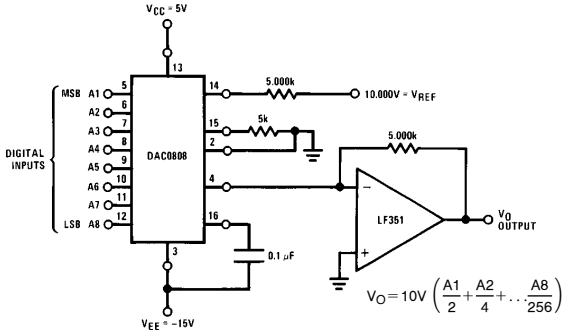

TL/H/5687–3

FIGURE 1. +10V Output Digital to Analog Converter (Note 7)

Typical Performance Characteristics

V_{CC} = 5V, V_{EE} = −15V, T_A = 25°C, unless otherwise noted

Logic Input Current vs Input Voltage

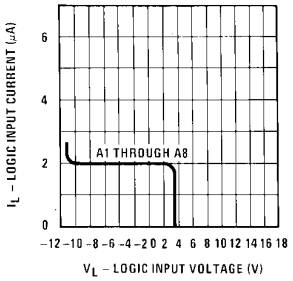

Bit Transfer Characteristics

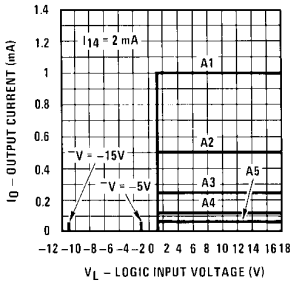

Logic Threshold Voltage vs Temperature

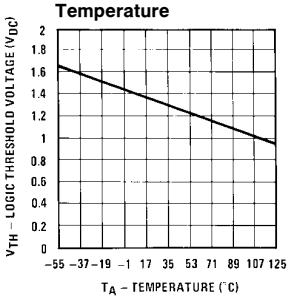

Output Current vs Output Voltage (Output Voltage Compliance)

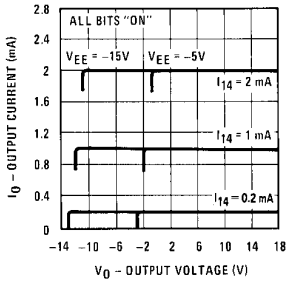

Output Voltage Compliance vs Temperature

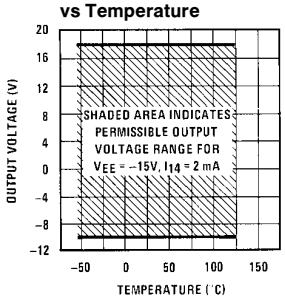

Typical Power Supply Current vs Temperature

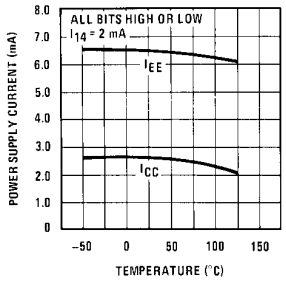

Typical Power Supply Current vs V_{EE}

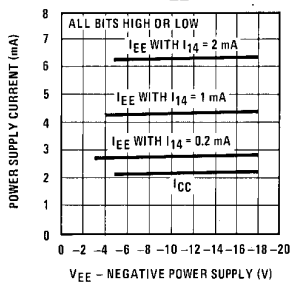

Typical Power Supply Current vs V_{CC}

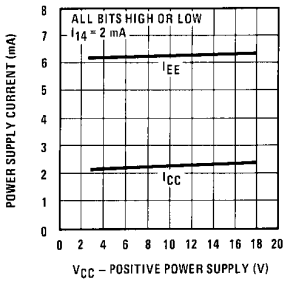

Reference Input Frequency Response

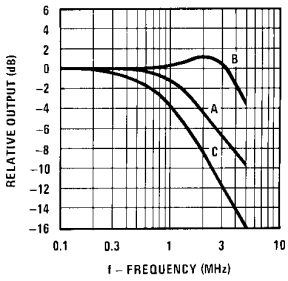

TL/H/5687–5

Unless otherwise specified: R14 = R15 = 1 kΩ, C = 15 pF, pin 16 to V_{EE}; R_L = 50Ω, pin 4 to ground.

Curve A: Large Signal Bandwidth Method of *Figure 7*, V_{REF} = 2 Vp-p offset 1 V above ground.

Curve B: Small Signal Bandwidth Method of *Figure 7*, R_L = 250Ω, V_{REF} = 50 mVp-p offset 200 mV above ground.

Curve C: Large and Small Signal Bandwidth Method of *Figure 9* (no op amp, R_L = 50Ω), R_S = 50Ω, V_{REF} = 2V, V_S = 100 mVp-p centered at 0V.

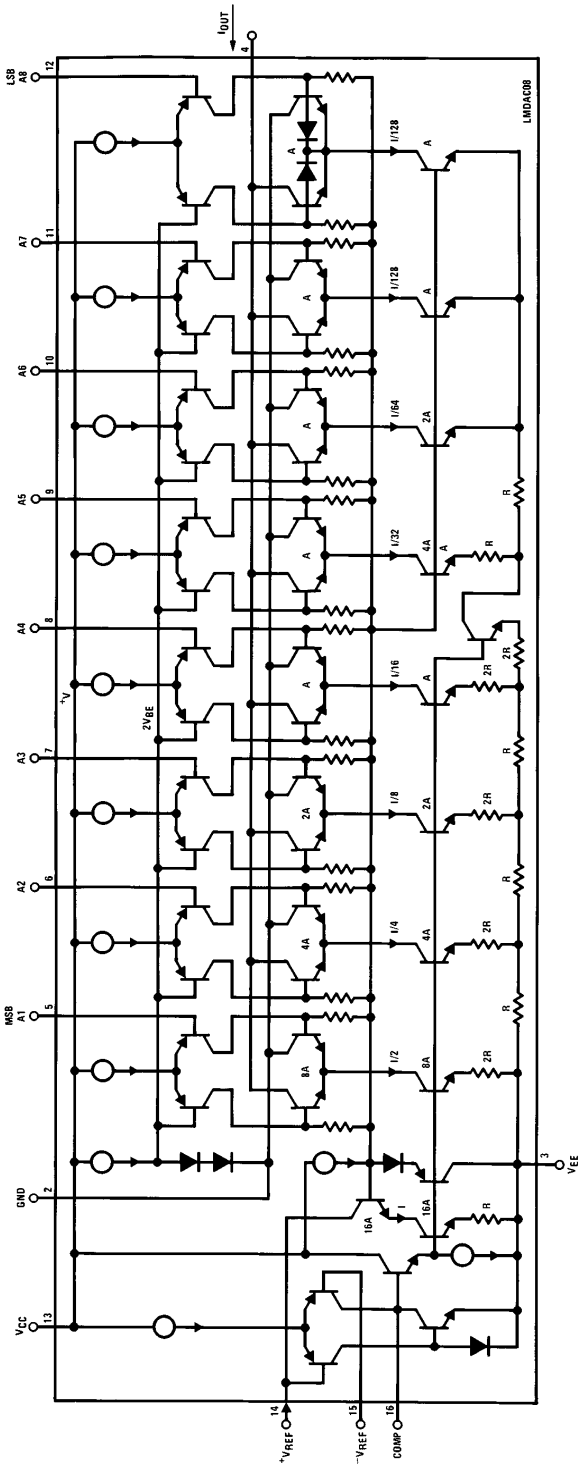

TL/H/5687–4

FIGURE 2. Equivalent Circuit of the DAC0808 Series (Note 7)

Test Circuits

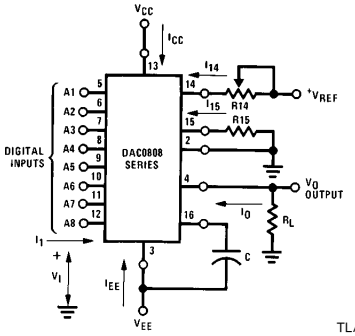

TL/H/5687–6

V_I and I_1 apply to inputs A1–A8.

The resistor tied to pin 15 is to temperature compensate the bias current and may not be necessary for all applications.

$$I_O = K\left(\frac{A1}{2} + \frac{A2}{4} + \frac{A3}{8} + \frac{A4}{16} + \frac{A5}{32} + \frac{A6}{64} + \frac{A7}{128} + \frac{A8}{256}\right)$$

where $K \cong \frac{V_{REF}}{R14}$

and A_N = "1" if A_N is at high level

A_N = "0" if A_N is at low level

FIGURE 3. Notation Definitions Test Circuit (Note 7)

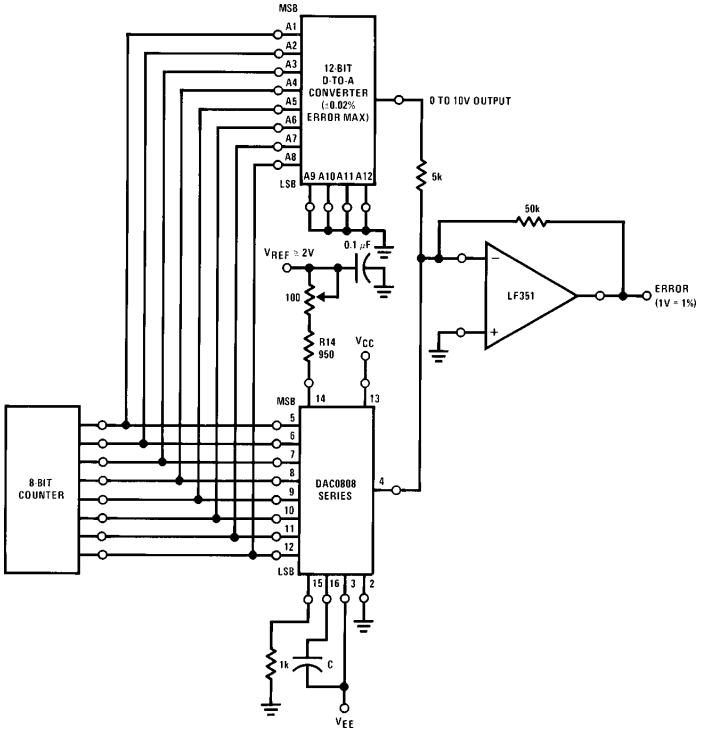

TL/H/5687–7

FIGURE 4. Relative Accuracy Test Circuit (Note 7)

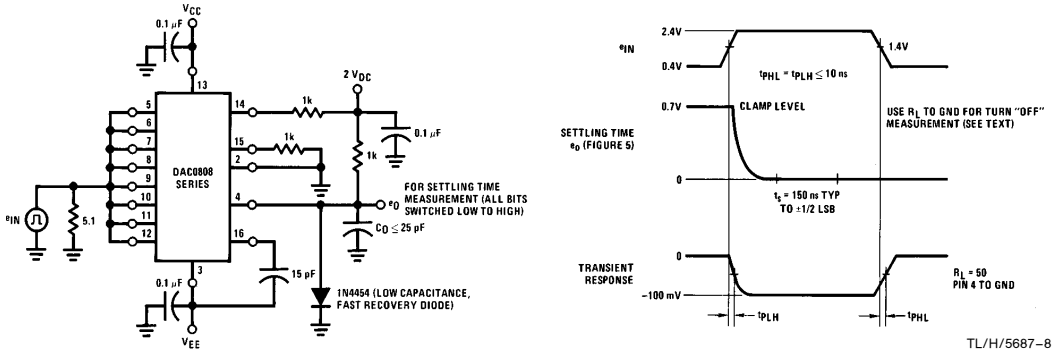

TL/H/5687–8

FIGURE 5. Transient Response and Settling Time (Note 7)

Test Circuits (Continued)

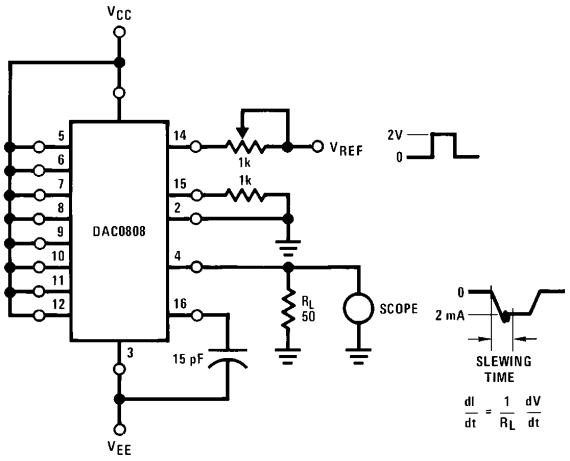

TL/H/5687–9

FIGURE 6. Reference Current Slew Rate Measurement (Note 7)

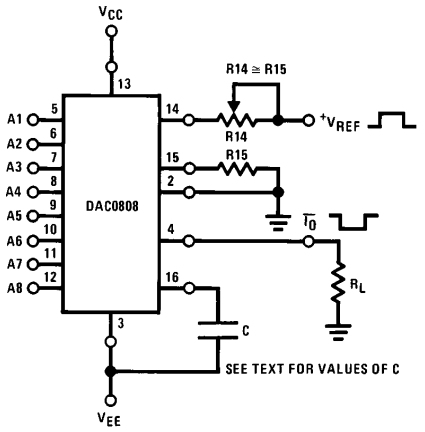

TL/H/5687–10

FIGURE 7. Positive V_{REF} (Note 7)

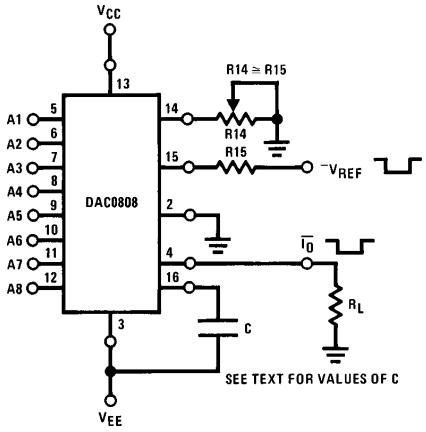

TL/H/5687–11

FIGURE 8. Negative V_{REF} (Note 7)

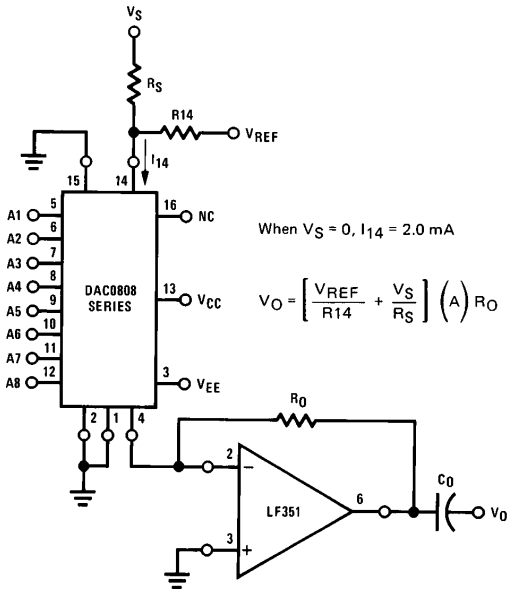

TL/H/5687–12

FIGURE 9. Programmable Gain Amplifier or Digital Attenuator Circuit (Note 7)

Application Hints

REFERENCE AMPLIFIER DRIVE AND COMPENSATION

The reference amplifier provides a voltage at pin 14 for converting the reference voltage to a current, and a turn-around circuit or current mirror for feeding the ladder. The reference amplifier input currrent, I_{14}, must always flow into pin 14, regardless of the set-up method or reference voltage polarity.

Connections for a positive voltage are shown in *Figure 7*. The reference voltage source supplies the full current I_{14}. For bipolar reference signals, as in the multiplying mode, R15 can be tied to a negative voltage corresponding to the minimum input level. It is possible to eliminate R15 with only a small sacrifice in accuracy and temperature drift.

The compensation capacitor value must be increased with increases in R14 to maintain proper phase margin; for R14 values of 1, 2.5 and 5 kΩ, minimum capacitor values are 15, 37 and 75 pF. The capacitor may be tied to either V_{EE} or ground, but using V_{EE} increases negative supply rejection.

Application Hints (Continued)

A negative reference voltage may be used if R14 is grounded and the reference voltage is applied to R15 as shown in *Figure 8*. A high input impedance is the main advantage of this method. Compensation involves a capacitor to V_{EE} on pin 16, using the values of the previous paragraph. The negative reference voltage must be at least 4V above the V_{EE} supply. Bipolar input signals may be handled by connecting R14 to a positive reference voltage equal to the peak positive input level at pin 15.

When a DC reference voltage is used, capacitive bypass to ground is recommended. The 5V logic supply is not recommended as a reference voltage. If a well regulated 5V supply which drives logic is to be used as the reference, R14 should be decoupled by connecting it to 5V through another resistor and bypassing the junction of the 2 resistors with 0.1 μF to ground. For reference voltages greater than 5V, a clamp diode is recommended between pin 14 and ground.

If pin 14 is driven by a high impedance such as a transistor current source, none of the above compensation methods apply and the amplifier must be heavily compensated, decreasing the overall bandwidth.

OUTPUT VOLTAGE RANGE

The voltage on pin 4 is restricted to a range of -0.55 to 0.4V when $V_{EE} = -5V$ due to the current switching methods employed in the DAC0808.

The negative output voltage compliance of the DAC0808 is extended to $-5V$ where the negative supply voltage is more negative than $-10V$. Using a full-scale current of 1.992 mA and load resistor of 2.5 kΩ between pin 4 and ground will yield a voltage output of 256 levels between 0 and $-4.980V$. Floating pin 1 does not affect the converter speed or power dissipation. However, the value of the load resistor determines the switching time due to increased voltage swing. Values of R_L up to 500Ω do not significantly affect performance, but a 2.5 kΩ load increases worst-case settling time to 1.2 μs (when all bits are switched ON). Refer to the subsequent text section on Settling Time for more details on output loading.

OUTPUT CURRENT RANGE

The output current maximum rating of 4.2 mA may be used only for negative supply voltages more negative than $-8V$, due to the increased voltage drop across the resistors in the reference current amplifier.

ACCURACY

Absolute accuracy is the measure of each output current level with respect to its intended value, and is dependent upon relative accuracy and full-scale current drift. Relative accuracy is the measure of each output current level as a fraction of the full-scale current. The relative accuracy of the DAC0808 is essentially constant with temperature due to the excellent temperature tracking of the monolithic resistor ladder. The reference current may drift with temperature, causing a change in the absolute accuracy of output current. However, the DAC0808 has a very low full-scale current drift with temperature.

The DAC0808 series is guaranteed accurate to within $\pm$½ LSB at a full-scale output current of 1.992 mA. This corresponds to a reference amplifier output current drive to the ladder network of 2 mA, with the loss of 1 LSB (8 μA) which is the ladder remainder shunted to ground. The input current to pin 14 has a guaranteed value of between 1.9 and 2.1 mA, allowing some mismatch in the NPN current source pair. The accuracy test circuit is shown in *Figure 4*. The 12-bit converter is calibrated for a full-scale output current of 1.992 mA. This is an optional step since the DAC0808 accuracy is essentially the same between 1.5 and 2.5 mA. Then the DAC0808 circuits' full-scale current is trimmed to the same value with R14 so that a zero value appears at the error amplifier output. The counter is activated and the error band may be displayed on an oscilloscope, detected by comparators, or stored in a peak detector.

Two 8-bit D-to-A converters may not be used to construct a 16-bit accuracy D-to-A converter. 16-bit accuracy implies a total error of $\pm$½ of one part in 65,536 or $\pm$0.00076%, which is much more accurate than the $\pm$0.019% specification provided by the DAC0808.

MULTIPLYING ACCURACY

The DAC0808 may be used in the multiplying mode with 8-bit accuracy when the reference current is varied over a range of 256:1. If the reference current in the multiplying mode ranges from 16 μA to 4 mA, the additional error contributions are less than 1.6 μA. This is well within 8-bit accuracy when referred to full-scale.

A monotonic converter is one which supplies an increase in current for each increment in the binary word. Typically, the DAC0808 is monotonic for all values of reference current above 0.5 mA. The recommended range for operation with a DC reference current is 0.5 to 4 mA.

SETTLING TIME

The worst-case switching condition occurs when all bits are switched ON, which corresponds to a low-to-high transition for all bits. This time is typically 150 ns for settling to within $\pm$½ LSB, for 8-bit accuracy, and 100 ns to ½ LSB for 7 and 6-bit accuracy. The turn OFF is typically under 100 ns. These times apply when $R_L \leq 500\Omega$ and $C_O \leq 25$ pF.

Extra care must be taken in board layout since this is usually the dominant factor in satisfactory test results when measuring settling time. Short leads, 100 μF supply bypassing for low frequencies, and minimum scope lead length are all mandatory.

Physical Dimensions inches (millimeters)

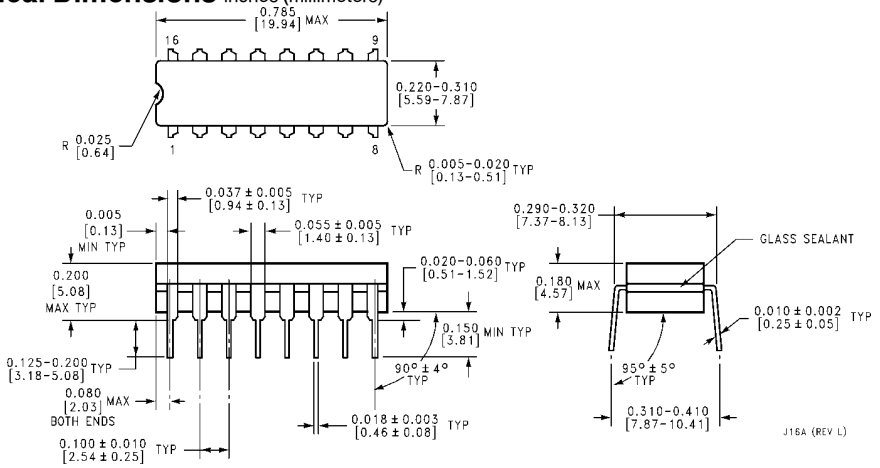

Dual-In-Line Package
Order Number DAC0807 or DAC0806
NS Package Number J16A

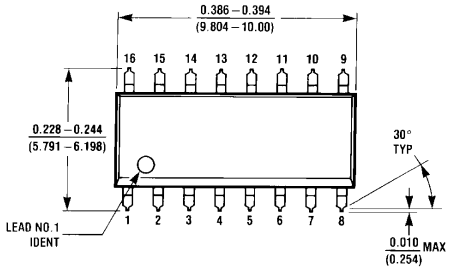

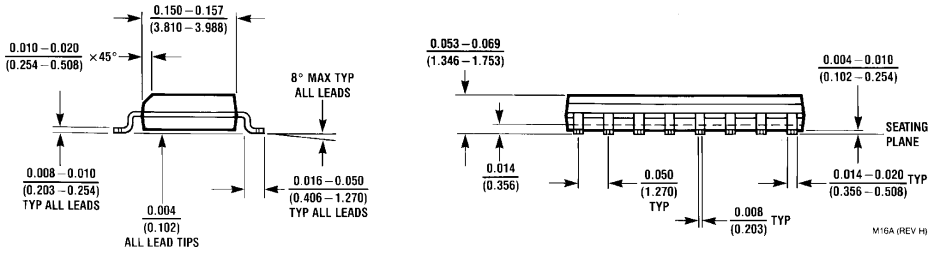

Small Outline Package
Order Number DAC0806LCM, DAC0807LCM or DAC0808LCM
NS Package Number M16A

Physical Dimensions inches (millimeters) (Continued)

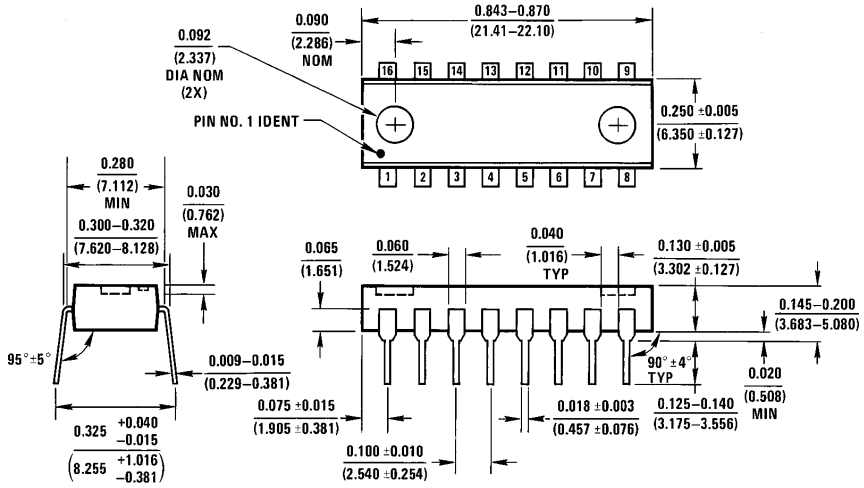

Dual-In-Line Package
Order Number DAC0808, DAC0807 or DAC0806
NS Package Number N16A

LIFE SUPPORT POLICY

NATIONAL'S PRODUCTS ARE NOT AUTHORIZED FOR USE AS CRITICAL COMPONENTS IN LIFE SUPPORT DEVICES OR SYSTEMS WITHOUT THE EXPRESS WRITTEN APPROVAL OF THE PRESIDENT OF NATIONAL SEMICONDUCTOR CORPORATION. As used herein:

1. Life support devices or systems are devices or systems which, (a) are intended for surgical implant into the body, or (b) support or sustain life, and whose failure to perform, when properly used in accordance with instructions for use provided in the labeling, can be reasonably expected to result in a significant injury to the user.
2. A critical component is any component of a life support device or system whose failure to perform can be reasonably expected to cause the failure of the life support device or system, or to affect its safety or effectiveness.

National Semiconductor Corporation
1111 West Bardin Road
Arlington, TX 76017
Tel: 1(800) 272-9959
Fax: 1(800) 737-7018

National Semiconductor Europe
Fax: (+49) 0-180-530 85 86
Email: cnjwge@tevm2.nsc.com
Deutsch Tel: (+49) 0-180-530 85 85
English Tel: (+49) 0-180-532 78 32
Français Tel: (+49) 0-180-532 93 58
Italiano Tel: (+49) 0-180-534 16 80

National Semiconductor Hong Kong Ltd.
13th Floor, Straight Block,
Ocean Centre, 5 Canton Rd.
Tsimshatsui, Kowloon
Hong Kong
Tel: (852) 2737-1600
Fax: (852) 2736-9960

National Semiconductor Japan Ltd.
Tel: 81-043-299-2309
Fax: 81-043-299-2408

National does not assume any responsibility for use of any circuitry described, no circuit patent licenses are implied and National reserves the right at any time without notice to change said circuitry and specifications.