Type VG (metal thread)

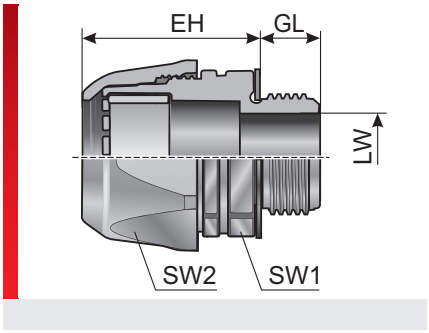

PRODUCT INFORMATION

The VG conduit fittings are made of specially modified polyamide 6, thermoplastic elastomer and nickel-plated brass. The materials are halogen, phosphor and cadmium-free. The VG conduit fittings feature the following advantages:

- Quick assembly, insert conduit, screw upper part tight, done
- No parts can get lost, delivered completely assembled
- Resistant to vibration due to lockable cap nut
- Clamping along entire circumference, ensuring maximum tensile strength.
- High level of tightness at IP 68/69K to 6 bar without any add-on components to EN 60529

Specification:

- EN 45545-2:2016 3x HL3

SPECIFICATIONS

Fitting: Mod. polyamide PA 6
Connecting thread Brass nickel-plated

-40 – 110 °C transient / short term 140 °C

V0 self-extinguishing

IP 68 up to 6 bar (IP 69K)

Type	Order No.	Colour	Connecting thread	Suitable for Murrflex	EH mm	GL mm	LW mm	SW 1 / 2 mm	Pack qty.
Metric metal thread									
VG M25-M[1]	83511218	Grey	M25x1.5	M25/P21	37.00	13.00	19.00	41.00 / 41.00	50

[1] With cURus- approval

Suitable for

MATERIAL PROPERTIES

Fitting: Mod. polyamide PA 6
Connecting thread Brass nickel-plated

THERMAL PROPERTIES

Temperature / temperature range
-40 – 110 °C 140 °C

FIRE BEHAVIOUR

Fire classification
V0 self-extinguishing

Smoke emission class
SR2 DIN 54837 / 5510-2

Flammability classification
S4 DIN 5510-2

Brandeigenschaften nach DIN EN 45545-2 : 2013 Rev. 2016
C.I.T. R22 / R23 HL3 = 0,43
LOI R22 / R23 HL3 = 33,8 %
Ds (max.) R22 / R23 HL3 = 63

© Murrplastik Systemtechnik GmbH • prvID_64833~20170914~890283~83511218

Type VG (metal thread)

MECHANICAL PROPERTIES

Protection class
IP 68 up to 6 bar (IP 69K)

APPROVALS AND OPERATING PERMITS

Railway EU approval
EN 45545-2 : 2016 R22 HL2 / R23 HL3

CSA approval

cURus approval

TECHNICAL INFORMATION

Halogen-free
DIN 53474

CONFORMITY

RoHS (EC Directive 202/95/EC)

GENERAL INFORMATION

Made in Germany

All details given in our sales material prospectuses and catalogues as well as the information available online are based on our current knowledge of the products described.
The electronic data and files made available by Murrplastik, particularly CAD files are based on our current knowledge of the product described.
A legally binding assurance of certain properties or the suitability for a certain purpose can not be determined from this information.
All information with respect to the chemical and physical properties of Murrplastik products as well as application advice given verbally, in writing or by tests, is given to the best of our knowledge.
This does not free the purchaser of carrying out their own inspections and tests in order to determine the suitability of a product for a specific purpose.
Murrplastik accepts no responsibility for the available information being up-to-date, correct or complete. Neither do we accept responsibility for the quality of this information.
Murrplastik accepts no liability for damage caused as a result of using our products.
Murrplastik reserves the right to make technical changes and improvements through constant further development of products and services.
Our General Terms and Conditions apply.
© Murrplastik Systemtechnik GmbH • prvID_64833~20170914~890283~83511218