KMG/F ball bearing - SRF hose ring

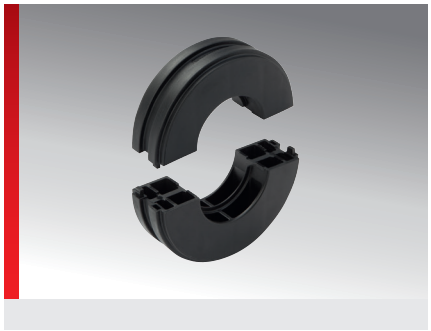

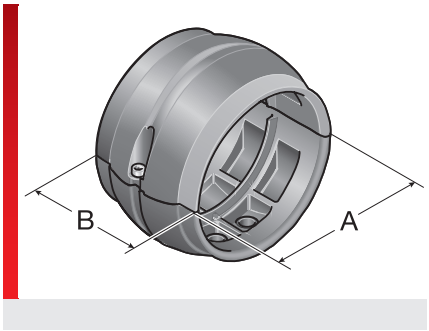

PRODUCT INFORMATION

The KMG/F and SRF have been designed for robot applications and other moving handling equipment.
The SH system holder can be mounted easily and quickly in the detachably connected inlays and is the perfect fit for fixing Murrflex cable protection conduits.
The KMG-F and SRF are made of especially modified polyamide.

The special advantages of the KMG-F centre ball joint and of the SRF hose ring are:

- Suitable for conversions or subsequent installation
- May be used statically fixed (KMG-F + SRF) or detachable at the axis (KMG-F)
- Long service life
- easy assembly and disassembly
- Murrflex cable protection conduits are firmly fastened and are therefore securely routed

SPECIFICATIONS

Mod. polyamide

-40 – 110 °C transient / short term 140 °C

acc. to UL94 V0

HF RoHS Made in Germany

Type	Order No.	Colour	Suitable for Murrflex	Suitable for System holder	Version	A mm	B mm	Pack qty.
Hose ring (fixed) for fastening cable protection conduits								
SRF-M40/P36[1)]	83692288	Black	M40/P36	SH 56/70	separable	89.50	27.00	1

[1)] * mainly developed for use in the R-TecBox-36/48 for continuous laying of a Murrplastik corrugated conduit.

Mod. polyamide

THERMAL PROPERTIES

Temperature / temperature range
-40 – 110 °C transient / short term 140 °C

FIRE BEHAVIOUR

Fire classification
acc. to UL94 V0

TECHNICAL INFORMATION

Halogen-free

CONFORMITY

RoHS (EC Directive 2011/65/EU)

© Murrplastik Systemtechnik GmbH • prvID_96604~20190117~890283~83692288

KMG/F ball bearing - SRF hose ring

APPROVALS AND OPERATING PERMITS

ROBI approval

Made in Germany

All details given in our sales brochures and catalogues, as well as the information available online, are based on our current knowledge of the products described.

The electronic data and files made available by Murrplastik, particularly CAD files are based on our current knowledge of the product described.

A legally binding assurance of certain properties or the suitability for a certain purpose can not be determined from this information.

All information with respect to the chemical and physical properties of Murrplastik products, as well as application advice given verbally, in writing or by tests, is given to the best of our knowledge.

This does not free the purchaser of carrying out their own inspections and tests in order to determine the suitability of a product for a specific purpose.

Murrplastik accepts no responsibility for the available information being up-to-date, correct or complete. Neither do we accept responsibility for the quality of this information.

Murrplastik accepts no liability for damage caused as a result of using our products.

Murrplastik reserves the right to make technical changes and improvements through constant further development of products and services.

Our General Terms and Conditions apply.

© Murrplastik Systemtechnik GmbH • prvID_96604~20190117~890283~83692288