Type EH

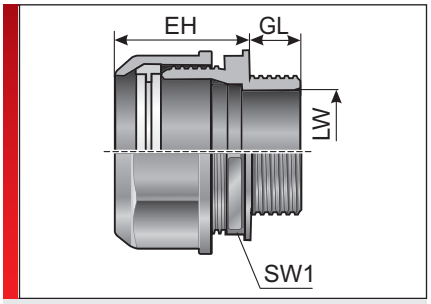

PRODUCT INFORMATION

The EH conduit fittings are made of specially modified polyamide and polyoxymethylene. The materials are halogen, phosphor and cadmium-free.
The EH conduit fittings feature the following advantages:

- No parts can get lost, delivered completely assembled
- Tightness of IP 65 for static and dynamic application
- Integrated clamping ring ensures high tear-out strength

Specification:

- UL listed E 148958
- EN 45545-2:2013 3x HL3

SPECIFICATIONS

Fitting: Mod. polyamide PA 6
Clamping ring Polyoxymethylene (POM)

IP 65

-40 – 110 °C transient / short term 140 °C

V0 self-extinguishing

Type	Order No.	Colour	Connecting thread	Suitable for Murrflex EW	EH mm	GL mm	LW mm	SW 1 mm	Pack qty.
NPT thread									
EH-NPT 1 1/4”/36[1]	83501216	Grey	1 1/4”	M40/P36(S)	44.00	18.00	35.00	55.00	25

[1] With cURus- approval

Suitable for

MATERIAL PROPERTIES

Fitting: Mod. polyamide PA 6
Clamping ring Polyoxymethylene (POM)

MECHANICAL PROPERTIES

Protection class
IP 65

THERMAL PROPERTIES

Temperature / temperature range
-40 – 110 °C transient / short term 140 °C

FIRE BEHAVIOUR

Fire classification
V0 self-extinguishing

Fire properties as per EN 45545-2: 2013
C.I.T. R22 / R23 HL3 = 0,43
LOI R22 / R23 HL3 = 33,8 %
Ds (max.) R22 / R23 HL3 = 63

© Murrplastik Systemtechnik GmbH • prvID_65182~20161203~890283~83501216

Type EH

APPROVALS AND OPERATING PERMITS

Railway EU approval

cURus approval

TECHNICAL INFORMATION

Halogen-free

CONFORMITY

RoHS (EC Directive 202/95/EC)

GENERAL INFORMATION

Made in Germany

All details given in our sales material prospectuses and catalogues as well as the information available online are based on our current knowledge of the products described.

The electronic data and files made available by Murrplastik, particularly CAD files are based on our current knowledge of the product described.

A legally binding assurance of certain properties or the suitability for a certain purpose can not be determined from this information.

All information with respect to the chemical and physical properties of Murrplastik products as well as application advice given verbally, in writing or by tests, is given to the best of our knowledge.

This does not free the purchaser of carrying out their own inspections and tests in order to determine the suitability of a product for a specific purpose.

Murrplastik accepts no responsibility for the available information being up-to-date, correct or complete. Neither do we accept responsibility for the quality of this information.

Murrplastik accepts no liability for damage caused as a result of using our products.

Murrplastik reserves the right to make technical changes and improvements through constant further development of products and services.

Our General Terms and Conditions apply.

© Murrplastik Systemtechnik GmbH • prvID_65182~20161203~890283~83501216