Type BL (clamping bracket for types UH and UHG)

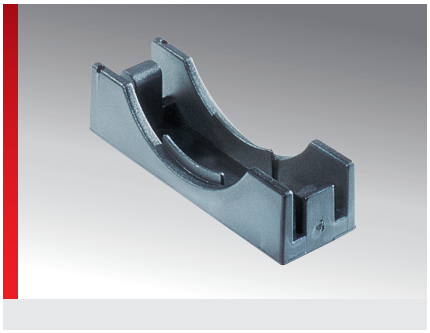

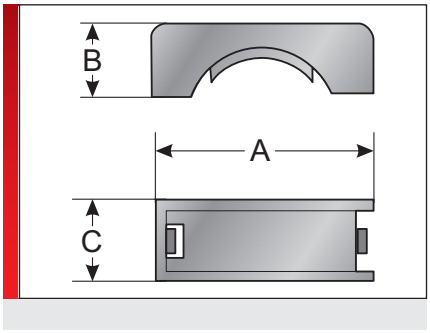

PRODUCT INFORMATION

The BL clamping bracket can be used for types UH and UHG and is made from specially modified polyamide. The material is halogen, phosphor and cadmium-free.
The bracket can be used to achieve additional support of the conduit clamp for high loads.

Specification:
- EN 45545-2:2016 3x HL3

SPECIFICATIONS

UL listed material Mod. polyamide PA 6

-40 – 110 °C transient / short term 140 °C

V0 self-extinguishing

EU GL HF RoHS Made in Germany

Type	Order No.	Colour	Suited for holder	A mm	B mm	C mm	Pack qty.
BL 21	83621412	Black	UH 21 / UHG 21	41.00	13.00	15.50	100

Suitable for

MATERIAL PROPERTIES

UL listed material Mod. polyamide PA 6

THERMAL PROPERTIES

Temperature / temperature range
-40 – 110 °C transient / short term 140 °C

FIRE BEHAVIOUR

Fire classification
V0 self-extinguishing

Fire behaviour in accordance with DIN EN 45545-2:2016-02
C.I.T. R22 / R23 HL3 = 0,43
LOI R22 / R23 HL3 = 33,8 %
Ds (max.) R22 / R23 HL3 = 63

APPROVALS AND OPERATING PERMITS

Railway EU approval
EN 45545-2 : 2016 Stufe 3x HL3 (R22/R23)

GL approval

© Murrplastik Systemtechnik GmbH • prvID_65817~20170509~890283~83621412

Type BL (clamping bracket for types UH and UHG)

TECHNICAL INFORMATION

HF **Halogen-free**

CONFORMITY

RoHS **RoHS (EC Directive 202/95/EC)**

GENERAL INFORMATION

Made in Germany **Made in Germany**

All details given in our sales material prospectuses and catalogues as well as the information available online are based on our current knowledge of the products described.
The electronic data and files made available by Murrplastik, particularly CAD files are based on our current knowledge of the product described.
A legally binding assurance of certain properties or the suitability for a certain purpose can not be determined from this information.
All information with respect to the chemical and physical properties of Murrplastik products as well as application advice given verbally, in writing or by tests, is given to the best of our knowledge.
This does not free the purchaser of carrying out their own inspections and tests in order to determine the suitability of a product for a specific purpose.
Murrplastik accepts no responsibility for the available information being up-to-date, correct or complete. Neither do we accept responsibility for the quality of this information.
Murrplastik accepts no liability for damage caused as a result of using our products.
Murrplastik reserves the right to make technical changes and improvements through constant further development of products and services.
Our General Terms and Conditions apply.
© Murrplastik Systemtechnik GmbH • prvID_65817~20170509~890283~83621412