No.: RD20210312001 **TO: Ropla**

APPROVAL SHEET No. : G-1305A

Series No.: VT

Specification No.: add black

Halogen-Free Rohs2.0

APPROVAL SHEET

FOR CONDUCTIVE POLYMER ALUMINUM SOLID ELECTROLYTIC CAPACITORS

No.	(Customer No.)	(Koshin Part No.)	Description	ΦD x L
1		VT-063V100ME057-T/R	63V10μF	6.3X5.7
2		VT-004V681ME077-T/R	4V680μF	6.3X7.7

APPROVED BY:

PLEASE SIGN RETURN US ONE COPY OF THE APPROVAL SHEET

DESIGNED BY: JIANGYANFEI CHECKEDBY: JIANGYUANYUAN APPROVED BY: HUANGXUEHUI

TEL: 0755-89501998 FAX: 0755-89500378 POSTAL CODE: 518129

E-mail: koshin@koshin.com.hk

DATE: 2021-3-12

KOAS

KOAS

1. Inner conformation drawing and inner constitute parts (curtness drawing):

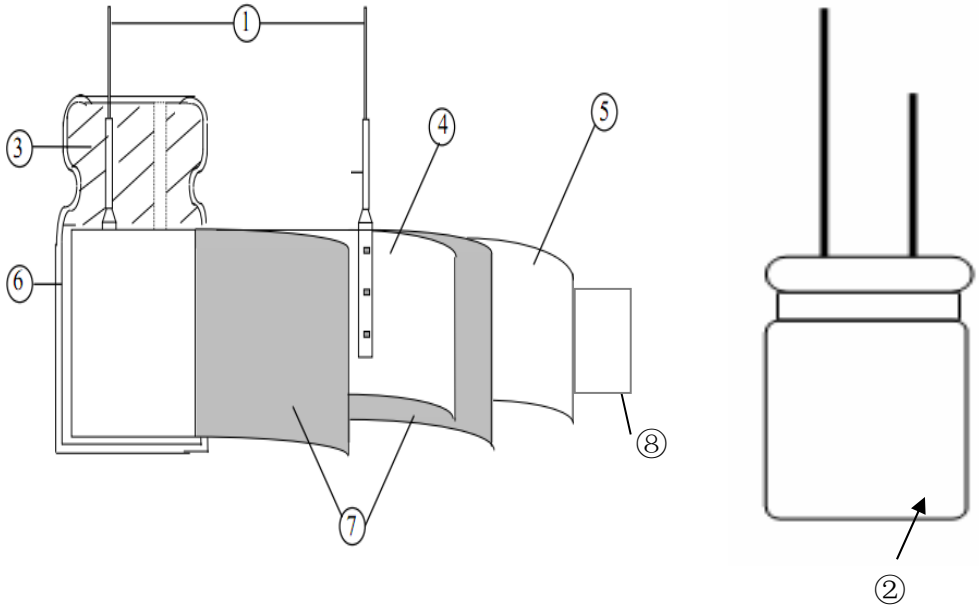

No.:	Composing Part	Material
①	Lead wire	Al+Cu+Fe+Sn
②	Chemical liquid	EDOT+PSS
③	Seal	Rubber
④	Anode foil	Aluminum foil
⑤	Cathode foil	Aluminum foil
⑥	Case	Aluminum
⑦	Paper	Cellulose
⑧	Tape	OPP

KOAS

Standard Size map:

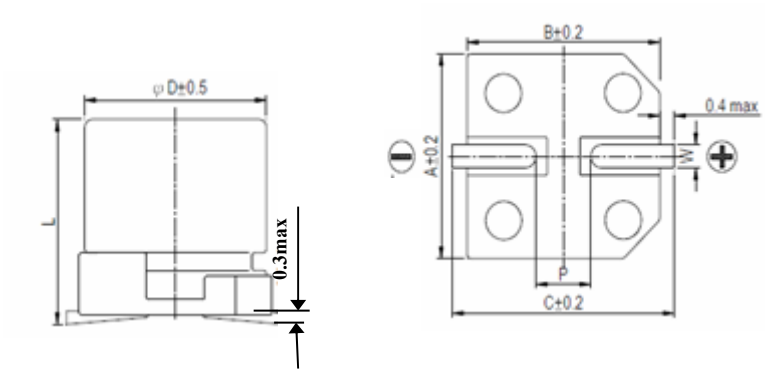

Lead spacing and Diameter Unit: mm

ΦD	L	A	B	C	W	P±0.2
6.3	5.7±0.5	6.6	6.6	7.2	0.5~0.8	2.0
6.3	7.7±0.5	6.6	6.6	7.2	0.5~0.8	2.0

Frequency Coefficient for Ripple Current

Frequency(Hz)	120≤F＜1K	1K≤F＜10K	10K≤F＜100K	100K≤F＜500K
Coefficient	0.05	0.3	0.7	1

KOAS

Series VT Conductive Polymer Aluminum Solid Capacitors

1. Our part No. :

For example:

VT	063V	100	M	E057
Se rise code	rated voltage	capacitance	tolerance	case size symbol
VT	63V	10μF	±20%	Φ6.3X5.7

2. Your part No.:

3. Marking:

Include company's brand series code, rated **voltage,** capacitance**, polarity.**

4. Specifications:

4.1 Temperature range : -55~+105℃

4.2.1 Capacitance tolerance : ±20%

4.2.2 Tangent of loss angle (tan δ) : 12%（20℃，120HZ）

4.2.3 Leakage current (μA) :

Rated voltage（V）	2.5-200
Leakage current (μA)	Less than 0.2CV or 500 whichever is large (after 2 minutes)

Note：I : Leakage current (μA) ，C : Capacitance (μF) ，V : Rated DC working voltage (V)

KOAS

RECOMMEDED SOLDERING CONDITIONS FOR ALUMINIUM SURFACE MOUNT TYPE

-Air or Infrared reflow soldering

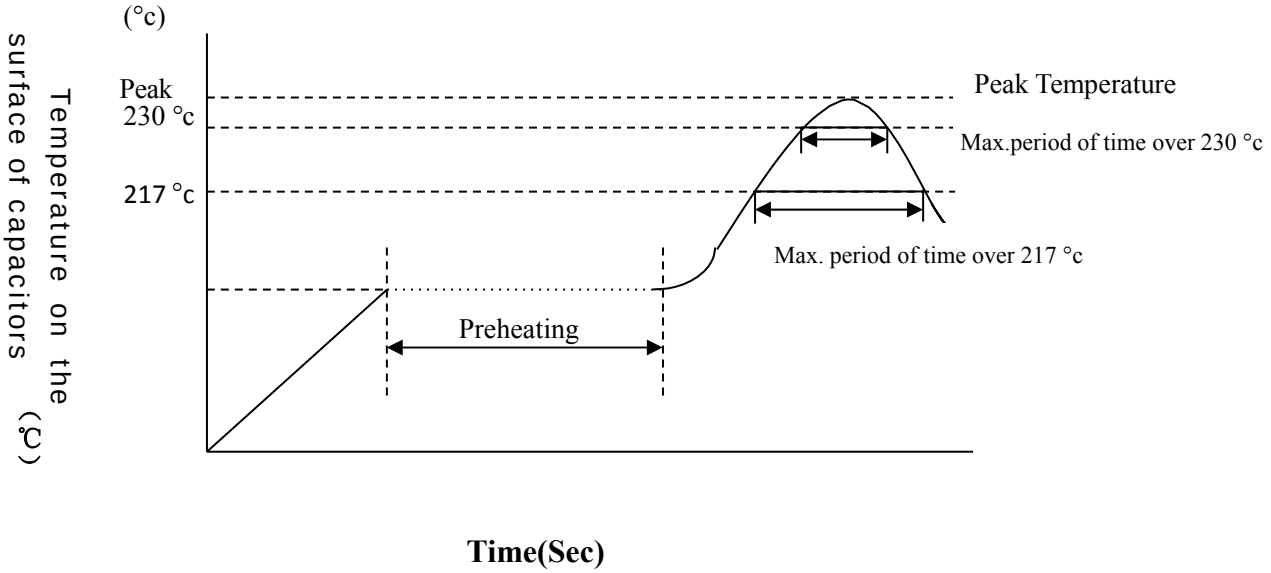

SMDshape	size	voltage	preheating	Time maintained over 217 °c	Time maintained over 230 °c	Peak temperature	Reflow number
	B52~E87	4~63V	150-180C ≤120Sec.	≤90 Sec	≤60 Sec	≤260 °c	≤2 times
		63V,80V		≤60 Sec	≤40 Sec	≤250 °c	≤2 times
	F63~G100	4~50V		≤60 Sec	≤30 Sec	≤245 °c	≤2 times
		63V~100，400V		≤30 Sec	≤20 Sec	≤240 °c	≤2 times
	H135~K215	6.3~50V		≤30 Sec	≤20 Sec	≤240 °c	≤2 times
		63~450V		≤20 Sec	_	≤230 °c	≤2 times

Remark: Reflow number cannot over 2 times. After first time reflow , must be ensure that the temperature of capacitors became cold to room temperature(5～35℃) ,then continue second flow.

KOAS

1. Scope:

This specification applies to conductive polymer aluminum solid capacitors used in electronic equipment.

2. Electrical characteristics:

<table>
<tr><th>NO.</th><th>ITEM</th><th>TEST METHOD</th><th>SPECIFICATION</th></tr>
<tr><td>2.1</td><td>Rated voltage</td><td></td><td rowspan="2">Voltage range、capacitance range ,see specification of this series</td></tr>
<tr><td>2.2</td><td>Capacitance</td><td rowspan="2">1. Measuring frequency:120Hz±12Hz
2. Measuring voltage:≤0.5Vrms+0.5VDC~2.0VDC
3. Measuring circuit: (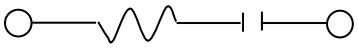)</td></tr>
<tr><td>2.3</td><td>Dissipation factor</td><td rowspan="2">Dissipation factor, leakage current, sees specification of this series.</td></tr>
<tr><td>2.4</td><td>Leakage current</td><td>DC leakage current shall be measured after 1~2minutes application of the DC rated working voltage through the 1000 Ω resistor at 20℃
 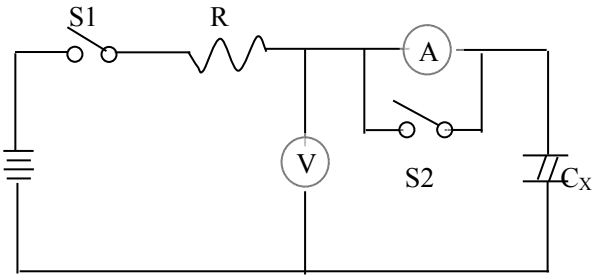

R: 1000 Ω 100 Ω
A: DC current meter
V: DC voltage meter
S1:Switch
S2:Switch for protect of current meter
C_X: Testing capacitor</td></tr>
<tr><td>2.5</td><td>Temperature characteristics</td><td>
<table>
<tr><th>STEP</th><th>TEMPERATURE</th><th>ITEM</th><th>CHARACTERISTICS</th></tr>
<tr><td>1</td><td>20℃±2℃</td><td>Measure: Capacitance 、tan δ、 Impedance</td><td>----------</td></tr>
<tr><td>2</td><td>-55℃±3℃</td><td>Z-55℃/20℃</td><td>≤1.25</td></tr>
<tr><td>3</td><td>Keep at 15 to 35℃ for 15 minutes or more</td><td>----------</td><td>----------</td></tr>
<tr><td>4</td><td>105℃±3℃</td><td>Z105℃/20℃</td><td>≤1.25</td></tr>
<tr><td rowspan="2">5</td><td rowspan="2">20℃±2℃</td><td>△C/C 20℃</td><td>Within ±5% of step1</td></tr>
<tr><td>tanδ</td><td>Less than or equal to the value</td></tr>
</table>
a. Z-55℃ or 105℃/ Z 20℃: impedance ratio at 100kHz;
b. △C/C 20℃ : Capacitance change at 120Hz;
tan δ at 120H
</td></tr>
</table>

KOAS

NO.	ITEM	TEST METHOD	SPECIFICATION
2.6	Surge test	Rated surge voltage shall be applied (switch on)for 30±5 second and then shall be applied (switch off) with discharge for 5±0.5min at room temperature. This cycle shall be repeated for 1000 cycles. Duration of one cycle is 6±0.5 minutes, Test temperature:15℃-35℃.	Capacitance change: within±15% of the initial specified value. Tan δ : 150% or less of the specified value ESR: 150% or less of the specified value Leakage current: Within initial specified value.

3.Mechanical characteristics ：

NO.	ITEM	TEST METHOD	SPECIFICATION
3.1	Vibration resistance	The frequency of the vibration shall vary uniformly within the range 10 to 55 Hz with the amplitude of 0.75mm, completing the cycle in the internal of one minute. The capacitor shall be securely mounted by its leads with hold the body of capacitor. The capacitor shall be vibrated in three mutually perpendicular directions for a period of 2 hours in each direction.	Appearance: no abnormal. Capacitance change: within ± 5% of initial measured value.
3.2	Solder ability	The leads are dipped in the solder bath of Sn at235℃±5℃for 2±0.5 seconds. The dipping depth should be set at 1.5~2.0 mm.	The solder alloy shall cover the 95% or more of dipped lead's area.

KOAS

4. Reliability:

NO.	ITEM	TEST METHOD	SPECIFICATION
4.1	Soldering heat resistance	The leads immerse in the solder bath of Sn at **260℃±5℃** for 10±1seconds until a distance of 1.5~2.0mm from the case.	No visible damage or leakage of electrolyte. Capacitance change: Within ± 5% of the initial measured value ESR: 150% or less of the specified value Leakage current: Less than initial specified value. Leakage current: Less than specified value
4.2	Damp head（steady state）	Subject the capacitor to 60℃±2℃ and 90% to 95% relative humidity for 1000±48 hours.	Capacitance change: Within ± 20% of the initial measured value Tan δ: Less than or equal to 1. 5 times of the value. Leakage current: Less than specified value ESR: Less than or equal to 1.5times of the value.
4.3	Load life	After 3000 hours continuous application of max allowable ripple current and DC rated voltage at 105℃±2℃, Measurements shall be performed after 16 hours exposed at room temperature.	Capacitance change: Within ±20% of the initial value. Tan δ : 150% or less of the specified value ESR: 150% or less of the specified value Leakage current: Less than initial specified value. Appearance :no Abnormal

KOAS

4.4	Rapid change or temperature	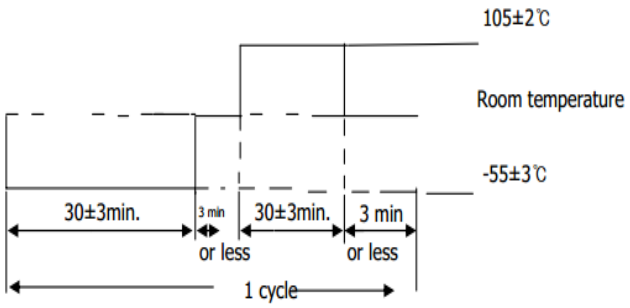 (Fig.1) Applied voltage: without load. Cycle number:5 Cyles. Test diagram:Fig.1	Capacitance change: Within ± 10% of the specified capacitance. Tan δ : Less than initial specified value. Leakage current: Less than initial specified value.

5. Marking **For example:**

1). Marking on capacitors includes:

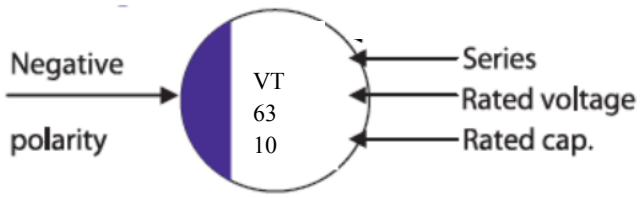

1>. Series

2>. Rated voltage

3>. Normal capacitance (μF)

4>. Polarity

5.2 Marking color: Blue

KOAS

Carrier Pack Taping Specification:

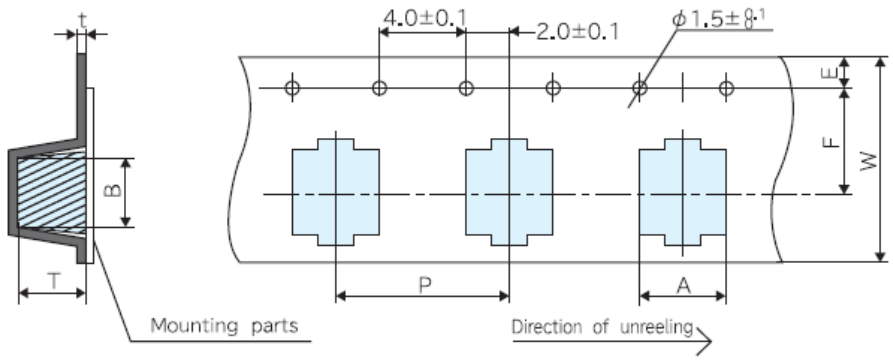

Product size table

Unit: mm

Dimension / Size Code	A	B	W	F	E	P	t	T
ϕ6.3X5.7	7.0±0.2	7.0±0.2	16	7.5	1.75±0.1	12	0.6max	6.3±0.2
ϕ6.3X7.7	7.0±0.2	7.0±0.2	16	7.5	1.75±0.1	12	0.6max	8.2±0.2

Polarity:

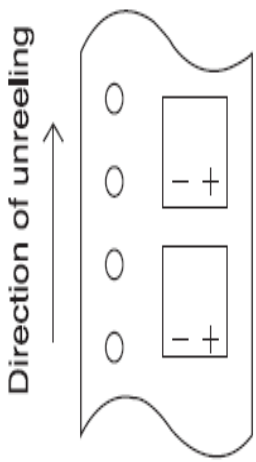

Package for SMD Type:

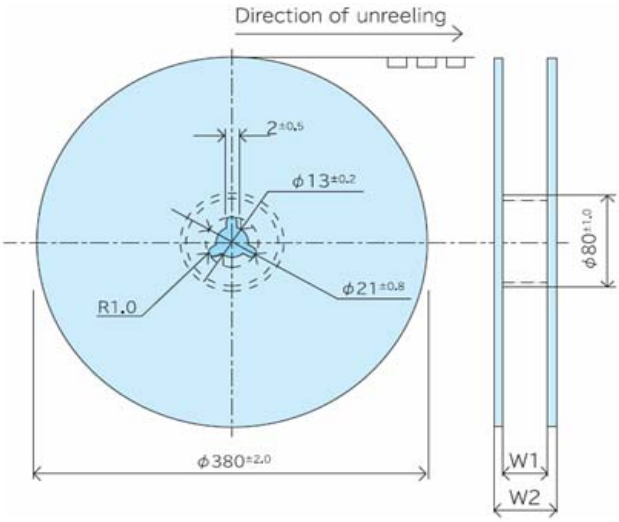

Size Code	W1(mm)	W2(mm)	Q'ty(pcs/reel)
ϕ6.3	18±0.5	22.5±1.0	1000

KOAS

Conductive Polymer Aluminum Solid Electrolytic Capacitors Specification

Series	VT	63 V 10 μF	Part No.	VT-063V100ME057-T/R
Customer No.	/		Case size	ΦD 6.3 X L 5.7

Specification	Items	Standard
	Operating temperature range	- 55 ~ + 105 ℃
	Capacitance tolerance	±20% (20℃ , 120Hz)
	Dissipation factor (MAX)	(Less than) 12% (20℃ , 120Hz)
	Leakage current (MAX)	(Less than) 500μA (20℃ 63 V 2 min)
	E S R (MAX)	60 mΩ (100KHz , 20℃)
	Ripple current (MAX)	1460 mArms (100kHz , 105℃)
	Load life	3000 hrs
Outline	Marking color	Blue
	(Dimensions)	

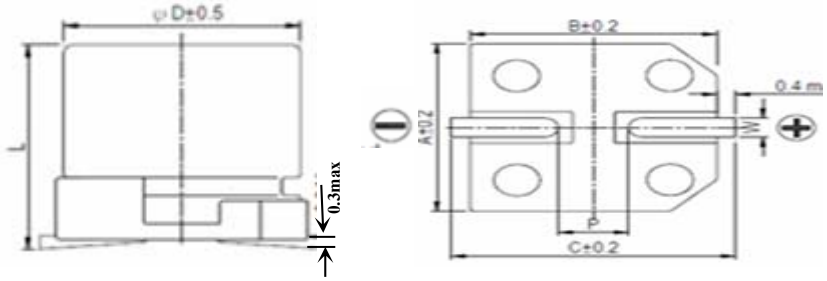

Lead spacing and Diameter (unit):mm

ΦD	L	A	B	C	W	P±0.2
6.3	5.7±0.5	6.6	6.6	7.2	0.5-0.8	2.0

Recorder:	(The first edition) :2021-3-12

Wrote by: Jiangyun	Checked by: Jiangyuanyuan	Approved by: Huangxuehui

KOAS

Conductive Polymer Aluminum Solid Electrolytic Capacitors Specification

Series	VT	4 V 680 μF	Part No.	VT-004V681ME077-T/R
Customer No.	/		Case size	ΦD 6.3 X L 7.7

Specification	Items	Standard
	Operating temperature range	- 55 ~ + 105 ℃
	Capacitance tolerance	±20% (20℃ , 120Hz)
	Dissipation factor (MAX)	(Less than) 12% (20℃ , 120Hz)
	Leakage current (MAX)	(Less than) 544μA (20℃ 4 V 2 min)
	E S R (MAX)	20 mΩ (100KHz , 20℃)
	Ripple current (MAX)	3200 mArms (100kHz , 105℃)
	Load life	3000 hrs
Outline	Marking color	Blue
	(Dimensions)	

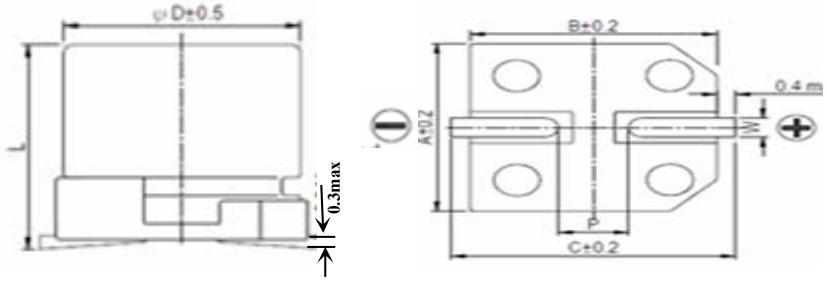

Lead spacing and Diameter (unit):mm

ΦD	L	A	B	C	W	P±0.2
6.3	7.7±0.5	6.6	6.6	7.2	0.5-0.8	2.0

Recorder:	(The first edition) :2021-3-12

Wrote by: Jiangyun	Checked by: Jiangyuanyuan	Approved by: Huangxuehui