JAMICON

(PE53AA2) ELECTROLYTIC CAPACITOR SPECIFICATION

CUSTOMER		ROPLA			
CODE	YOUR			NO.	
	OUR	XPS472M2G21KM		DATE	17,MAY.2005
SERIES		X P	TYPE S	POLARITY	
RATED VALUE		4700 μF 400 WV		SAFETY VENT	

TERMINAL TYPE 產品記號 (SYMBOL): S

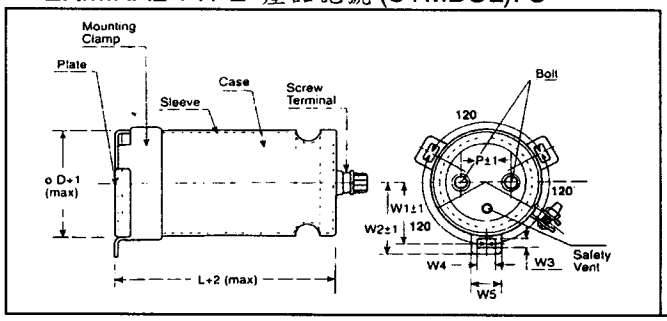

φ	77
W1	44.8
W2	49.0
W3	4.5
W4	7.0
W5	13.0
P	32.0

DIMENSION			(m/m)
D	φ 77	L	115

VENT STYLES V	
	CASE VENT
V	RUBBER VENT

Item	Characteristics
Operation temperature Range	− 40 ℃ ~ + 105 ℃
Capacitance Tolerance	− 20 % ~ + 20 % (M)
Surge Voltage	450 VDC
Leakage Current	I ≦ 5000 (μA) 5 minutes
Dissipation Factor(tan δ)	≦ 0.15 (120Hz)
E.S.R.	< 0.053 (Ω) 120 Hz 20 ℃
Ripple Current	< 10.07 (A) 120 Hz 105 ℃
IMP.	< —— 120 Hz 20 ℃
Low Temperature Stability	Impedance Ratio At 120Hz Z− 25 ℃ / Z+ 20 ℃ : 8 MAX Z− ℃ / Z+ 20 ℃ : − MAX
Load Test	After 5000 Hrs At +105 ℃ Capacitance Change: ≦± 20 % of initial value D.F. (tan δ): ≦ 200 % of initial specified value Leakage Current: ≦ initial specified value Outlook: Should be without any change

TEST FREQ. : 120 Hz	TEST TEMP : 20 ℃	REFERENCE STANDARD : JIS C5102

	APPROVED BY	CHECKED BY	DESIGNED BY
KAIMEI ELECTRONIC CORP.		17.5.16 伍麒榮	技術部 17.5.09 張瑋方