承　认　书

APPROVAL SHEET

客　户： CUSTOMER	**ROPLA**	承认书编号： APP. NO.	**JSU003219030058-2**
系　列： SERIES	**RP**	使用温度范围： OPERATION TEMP. RANGE	**-40~+105℃**

凯美产品料号 JAMICON PART NO.：	客户产品料号 CUSTOMER PART NO.：
NRP109M050A2A5T60L	

客 户 承 认 印 CUSTOMER'S APPROVAL STAMP	凯美电机股份有限公司(总部) KAIMEI ELECTRONIC CORP.(Headquarters) 凯美電機股份有限公司 26.MAR.2019 技術部	
	APPROVED BY:	TESTED BY:
	王胜	何婷

凯美电机股份有限公司
新北市汐止区新台五路一段81号13楼之2

KAIMEI ELECTRONIC CORP.(Headquarters)
13th. FL., No.81, SEC. 1, XINTAI 5th RD. XIZHI DIST.
New Taipei City 22101, Taiwan R.O.C
Tel: +886-2-26981010 Fax: +886-2-26980386

凯捷国际有限公司
香港上环干诺道西88号粤财大厦22楼

JAMICON INTERNATIONAL LIMITED
22/F, Guangdong Finance Building, 88 Connaught Road West,
Sheung Wan, Hong Kong
Tel: +886-2-26981010 Fax: +886-2-26980386

东莞今美康电子有限公司
东莞市塘厦镇高丽工业区6号A2栋1楼
102室、103室

DONGGUAN JAMICON ELECTRONIC CO., LTD
Room 102/103, 1st Floor, Building A2, No. 6, Gaoli Industrial.
Zone, Tangxia Town, Dongguan City, Guangdong Province, China
Tel: +86-769-87919555

苏州凯美电子有限公司
苏州市相城区望亭镇问渡路68号

SUZHOU KAIMEI ELECTRONIC CO., LTD
No. 68 Wendu Rd, Wangting Town, Xiangcheng District,
Suzhou City, Jiangsu Province, China.
Tel : +86-512-65388640 Fax :+86-512-65381888

◆ Table of specification and characteristics 規格和特性表

NO	料 号 Part NO.	静电容量 CAP(μF) 120Hz 20℃	容量公差 CAP Tol. (%)	工作电压 WV	损失角 DF(%) (MAX) 120Hz 20℃	漏电流 LC(μA) (MAX) 5 min 20℃	纹波电流 RC(Arms) (MAX) 120Hz 105	负载寿命 Load Life (Hrs) 105℃	尺 寸 Dimensions (mm)	
									φD	L
1	NRP109M050A2A5T60L	10000	±20	50	25	5000	3.36	2000	35	60

◆ Dimensions 尺寸

φD	P	t	Hexagonal-bolt
35	12.7	6.3	M5 × 0.8 × 10

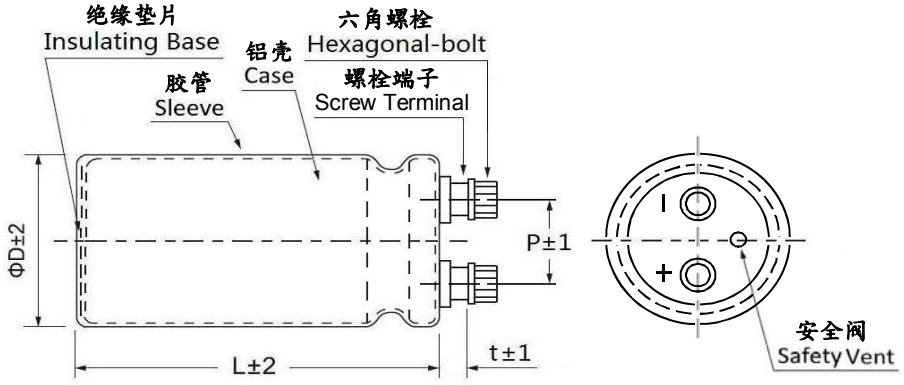

※ Clamp enclosed and Hexagonal-bolt locked to cap body
固定脚架和六角螺栓锁电容本体上。

◆ Marking 標示

JAMICON	⟵	JAMICON trademark 商标
105℃（×）	⟵	Maximum operating temperature and Capacitance tolerance 最高工作温度和静电容量公差
10000μF 50v	⟵	Capacitance and Rated voltage 标称容量和工作电压
POSITIVE +	⟵	Positive polarity of the terminals 正級級性
RPS	⟵	Series 系列

Ⅰ. Scope 范围

This standard defines characteristics and dimensions for aluminum electrolytic capacitors named RP Series for general purpose.
此标准描述了铝质电解电容 RP 系列的特性和尺寸。

Ⅱ. Construction (Dimensions and materials) 构造 (尺寸和材料) (Unit = mm)

φD	W1	W2	W3	W4	W5	Hexagonal-bolt	Maximum torque for terminals
35	48.0	58.0	6.0	3.5	10	M5 × 0.8 × 10	2 Nm
51	63.5	73.0	5.0	7.0	14	M5 × 0.8 × 10	2 Nm
64	76.2	85.1	5.0	7.0	14	M5 × 0.8 × 10	2 Nm
77	88.9	98.4	5.0	7.0	14	M5 × 0.8 × 10	2 Nm
90	101.6	111.1	5.0	7.0	14	M5 × 0.8 × 10	2 Nm

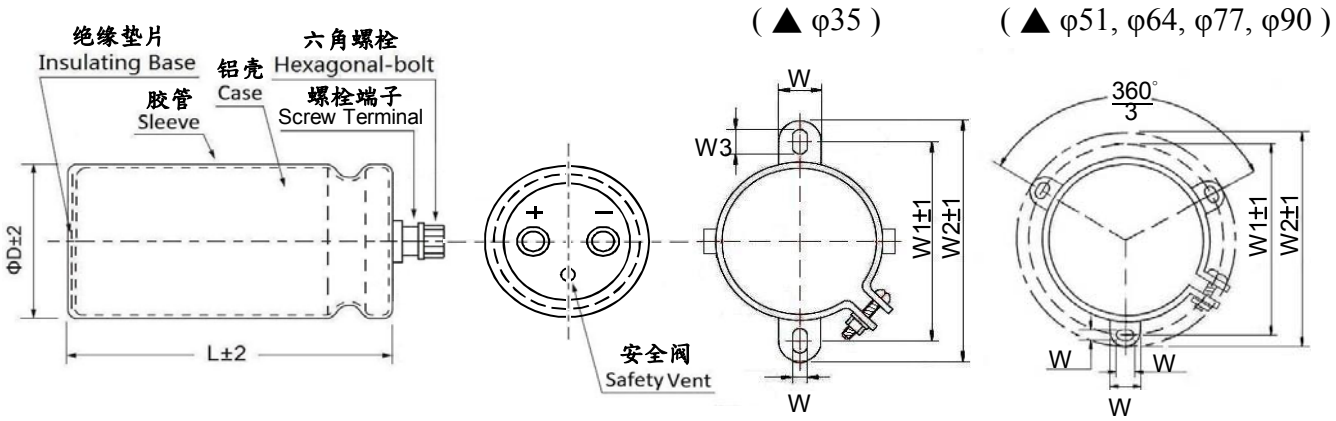

※ Clamp enclosed and Hexagonal-bolt locked to cap body
固定脚架和六角螺栓锁电容本体上。

Ⅲ. Characteristics 特性

Standard test condition 标准试验条件

Unless otherwise specified all tests shall be performed at, or referred to, an ambient temperature of 20℃ and a relative humidity not greater than 60%.
所有的试验应在环境温度20℃和相对湿度小于等于60%的条件下进行，除非另有规定。

Operating Temperature Range 工作温度范围

10~100VDC -40~+105℃
160~450VDC -25~+105℃

1. Electrical characteristics 电气特性

1.1 Working Voltage and Surge Voltage 工作电压和浪涌电压

W.V.：Working Voltage 工作电压(VDC)

S.V. ：Surge Voltage 浪涌电压 (V)

W.V.	10	16	25	35	50	63	100	160	200	250	350	400	450
S.V.	13	20	32	44	63	79	125	200	250	300	400	450	500

1.2 Leakage Current 漏电流

The maximum leakage current is specified in the following formula after DC working voltage applied for 5 minutes.

印加直流工作电压5分钟后的最大漏电流值如下列公式所示：

I=0.02CV or 5 (mA), whichever is smaller 任意一个较小值。

where I：Leakage Current (漏电流) (μA)

C：Rated Capacitance (额定容量) (μF)

V：Working Voltage (工作电压) (V)

Measurement circuit 测试电路

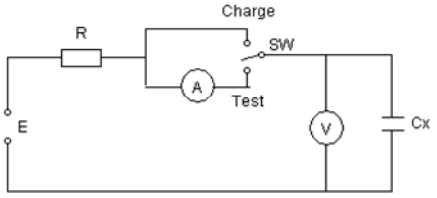

1.3 Dissipation Factor 损失角

Dissipation Factor at 120Hz/ 20℃ shall not exceed the values given in the table below.

在120 Hz / 20℃ 条件下的DF值不应超过下表中给出的值。

W.V.		10	16	25	35	50	63	100	160	200	250	350～450
φD	L	DF(%)										
φ35	≦96	80	70	35	30	25	20	15	15	15	15	15
	≧100	80	70	40	35	30	25	15	15	15	15	15
φ51	≦96	100	90	40	45	35	25	15	15	15	15	15
	≧100	100	90	50	50	40	30	15	15	15	15	15
φ64	≦96	120	100	60	55	40	30	20	15	15	15	15
	≧100	120	100	80	60	45	35	20	15	15	15	15
φ77	≧96	200	120	100	70	50	40	25	15	15	15	15
φ90	≧96	200	120	100	70	50	40	25	15	15	15	15

1.4 Low Temperature Characteristics 低温特性

The ratio of impedance at -25℃/+20℃ and -40℃/+20℃ of the capacitor shall be less than the following value at 120Hz.

电容器在120Hz的条件下,分别在-25℃/+20℃和-40℃/+20℃的阻抗比，应小于以下的规格值：

Rated Voltage 额定电压 (V)	10～100	160～450
Z(-25℃) / Z(+20℃)	—	8
Z(-40℃) / Z(+20℃)	12	—

1.5 Multiplier for Ripple Current 纹波电流频率修正系数

Frequency coefficient 频率系数

Frequency 频率(Hz)	60	120	1k	10k	100k
W.V.工作电压	Coefficient 系数				
10～35V	0.90	1.00	1.05	1.10	1.10
50～100V	0.90	1.00	1.10	1.15	1.15
160～450V	0.80	1.00	1.20	1.30	1.35

Temperature coefficient 温度系数

Ambient Temperature 环境温度 (℃)	45	55	70	85	105
W.V.工作电压	Coefficient 系数				
≦250V	3.00	2.50	2.00	1.40	1.00
≧350V	2.50	2.00	1.50	1.20	1.00

2. Endurance characteristics 耐久特性

2.1 Load Life 负荷寿命

After applying rated voltage with rated ripple current for 2000+12/-0 hours at 105±2℃,when the capacitors are restored to 20℃ the capacitors shall meet the following requirements.

在105±2℃环境中，不超过额定电压的范围下叠加额定纹波电流，连续加载额定电压2000+12/-0小时后，待温度恢复到20℃进行测量时，应满足以下要求。

Capacitance Change 容量变化	Within ±20% of initial value 在初始值的±20%以内
Dissipation factor 损失角	Not more than 200% of specified value 不超过规格值的200%
Leakage Current 漏电流	Not more than the specified value 不超过规格值

2.2 Shelf life 高温无负荷寿命

After placed at 105±2℃without voltage applied for 1000+12/-0 hours,when the capacitors are restored to 20℃, the capacitors shall meet the following requirements.

(Reference JIS C5101-4 4.1)

在105±2环境中，无负荷放置1000+12/-0小时，待温度恢复至20℃进行测量时，电容器应满足以下要求(参考JIS C5101-4 4.1)：

Capacitance Change 容量变化	Within ±20% of initial value 在初始值的±20%以内
Dissipation factor 损失角	Not more than 200% of specified value 不超过规格值的200%
Leakage Current 漏电流	Not more than the specified value 不超过规格值

2.3 Low temperature storage test 低温放置试验

The capacitor without rated voltage at the lowest operation temperature 16 hours, after 16 hours in room temperature, should do final measurements, the values are as following :

在最低工作温度下，无負荷放置16小時，

试验后，室温放置16小時后做最终测试，电容器应满足以下要求：

Capacitance Change 容量变化	Within ±10% of initial value 在初始值的±10%以内
Dissipation factor 损失角	Not more than the specified value 不超过规格值
Leakage Current 漏电流	Not more than the specified value 不超过规格值

2.4 Surge test 涌浪电压

The capacitor shall be applied the surge voltage connected with the 1kΩ resistor in room temperature, and shall be applied the surge voltage 1000 cycle, each for 30 seconds charge and 5minutes 30 seconds discharge, the final test values should be as following :

在室温下，电容连接1kΩ保护电阻施加涌浪电压
充电30秒，放电5分30秒，1000次循环后，电容器应满足以下要求：

Capacitance Change 容量变化	Within ±15% of initial value 在初始值的±15%以内
Dissipation factor 损失角	Not more than the specified value 不超过规格值
Leakage Current 漏电流	Not more than the specified value 不超过规格值
Visual 外观	NO damage 无异常

2.5 Venting Test 防爆试验

Apply 10A DC reverse current, in 30 minutes, pressure relief vent should properly function and metal pieces should not be dispersed, there are no irregularities.

将产品反向连接直流电源并按电流10A施加，防爆装置应能在30分钟内动作。
安全阀能正常工作没有危险状况如：没有火焰或无明火燃烧等。

Ⅳ. Mounting 安装

The paper separators and the electrolytic-conductive electrolytes in a non conductive polymer aluminum electrolytic capacitor are flammable. Leaking electrolyte on a printed circuit board can gradually erode the circuit on PC board, possibly causing smoke or burning.
非固态铝质电解电容器使用了可燃性有机溶剂为主要溶煤的导电性电解液和可燃性电解纸。当电解液万一漏出到印刷电路板上时，会腐蚀电路板导致电路板的电路间短路，甚至冒烟、起火等。

Verify the following points when designing a PC board.
在设计印刷配线板时需验证以下要点：

(1) Provide the appropriate holes spacing on the PC board to match with the terminal pitch of the capacitor. 在印刷配线板上保留适当的孔距以匹配电容器的端子间距。

(2) Make the following open space over the vent so that the vent can operate correctly.
电容器的安全阀部位上方请预留以下空间。

Case diameter 铝壳直径	Clearance 间隔
φ35 mm	≧3 mm
≧φ40 mm	≧5 mm

(3) Do not place any wires or circuit traces over the vent of the capacitor.
配线或电路不可延伸到电容器的安全阀部位上方。

(4) If Install a capacitor with the vent touching the PC board, needs an appropriate ventilation hole in PC board for vent open.
如果电容器的安全阀部会接触印刷配线板时，则印刷配线板上需要开一个适当的通风孔。

(5) Do not pass any circuit traces under the seal side of a capacitor. The trace must pass 1 or 2 mm to the side of the capacitor.
请不要在电容器的封口部下面进行电路配线。如果电容器附近配线，请确保线路间隔在1 mm（可以的话 2 mm）以上。

(6) Avoid placing any heat-generating object adjacent to a capacitor or even on the reverse side of the PC board. 请勿在电容器的周边及印刷配线板的背面(电容器的下面)放置发热的零件。

(7) Do not pass any via holes underneath a capacitor on double sided PC board.
两面印刷配线板上安装电容器时，设计时注意电容器下方不可有多余的基板孔或两面连接用贯通孔。

(8) In designing double sided PC board do not locate any copper trace under the seal side of a capacitor. 两面印刷配线板上装配电容器时，电容器主体的安装部位不可有配线线路。

(9) Screw type capacitor do not tighten the screw of the terminals and mounting clamps over the specified torque prescribed in the catalog or the production specification. Do not mount the terminal side of a screw mount capacitor downwards.
螺栓型铝电解电容器的拧紧及主体安装螺丝的扭力不要超过产品目录或承认书规定的范围。此外，横放时，安全阀的位置不可居于下方。

V. Storage Condition 储存条件

We recommend the following condition for storage.
请按照以下保管条件保管电容器：

(1) Store the capacitor indoors at a temperature of 5~35ºC and a relative humidity ≤75%
The storage period is 1 years after production.
不可将电容器保管在高温或高湿环境下，请保管在室温5～35℃、相对湿度75%以下的环境下。保管期限，原则上为制造后1年内。

(2) Please keep capacitor in the original package.
请尽量以原厂包装状态保管。

(3) Please do not keep the capacitors in places
请避免保管在以下环境：
1) Spray directly by water, high temperature high humidity, or storage in damp location.
溅水、高温高湿及结露的环境。
2) Spray directly by oil, or with oily gas location.
溅油、或者充满气体油成分的环境。
3) Spray directly by salt water, or salty location.
溅盐水、充满盐分的环境。
4) Storage in location with toxic gases, such as hydrogen sulfide, sulfurous acid, nitrous acid, chlorine or its compounds, and ammonium.
充满酸性有毒气体(EX:硫化氢、亚硫酸、亚硝酸、氯、溴、溴化甲烷...等)的环境。
5) Full with ammonium gas, alkaline toxic gas location.
充满氨气等碱性有毒气体的环境。
6) With acidic and alkaline solvent location.
充满氨气等碱性有毒气体的环境。
7) Directly sunlight, ozone, ultraviolet rays or radiation condition.
酸性及碱性溶剂的环境。
8) Severe vibration or mechanical shock conditions beyond the limits prescribed in the catalogs or the product specification.
直射阳光、臭氧、紫外线及放射线照射的环境。

(4) If a capacitor has been stored for more than one year under normal temperature (shorter if high temperature) and it shows increased leakage current, then a treatment by voltage application is recommended. The capacitor which hasn't been treated mustn't be used directly.
如果电容器在常温下储存超过一年(高温条件下不超过一年),出现漏电流上升现象,那么建议对电容器进行加压处理.未被处理过的电容器不能直接使用。

Ⅵ. Catalog numbering

JAMICON TYPE 类型 (Part Number 料号)：

1	2	3	4	5	6	7	8	9	10	11	12	13	14	15	16	17	18
N	R	P	1	0	9	M	0	5	0	A	2	A	5	T	6	0	L

- 18: Special code 特殊代码 (L:JAMICON)
- 16–17: Size 尺寸
- 14: Sleeve (Black with white printing) 胶管 (黑底白字印刷)
- 13: Spec (A: standard) 规格(A:标准品)
- 11–12: Lead Process 端子加工型号
- 9–10: Rated Voltage 额定电压
- 7–8: Cap. Tolerance 容量公差
- 5–6: Capacitance 静电容量
- 3–4: Series No. 系列编号
- 1–2: Type 类型 (SCREW PVC)

Ⅶ. Packaging specification (包装规格)

SCREW Type Aluminum Electrolytic Capacitors (螺栓型铝电解电容器)

Case size 尺寸 (mm)		Packing carton包装箱	
φD	L	Size 尺寸 (mm)	Quantity 数量 (pcs)
35	≦100	330×275×130	42
51	70～85	550×340×125	40
	90～105	550×340×145	40
	110～120	550×340×160	40
	130	550×340×175	40
64、77	70～85	550×340×125	15
	90～105	550×340×145	15
	110～120	550×340×160	15
	130	550×340×175	15
	140～160	550×340×200	15
	195	550×340×240	15
90	131	550×340×175	12
	157	550×340×200	12
	171	550×340×215	12
	196	550×340×240	12
	236	550×340×280	12

Ⅷ. Others

(1) All the Jamicon capacitors, which are authenticated by the SGS, and test report shows that the inspection results of Hexavalent Chromium VI(Cr(VI)), Cadmium (Cd), Mercury (Hg), Lead (Pb), Polybrominated Biphenyls (PBBs), Polybrominated Diphenyl Ether (PBDEs) comply with the RoHS requirements.

凯美所有电容器经SGS认证测试报告中所检测的六价铬 (Cr^{6+})、镉(Cd)、汞（Hg）、铅(Pb)、多溴联苯(PBBs)和多溴联苯醚(PBDEs)均符合RoHS要求.

(2) Satisfied characteristic JIS C 5101. 符合JIS C 5101特性。

(3) Aluminum Electrolytic Capacitors may b e damaged by corrosion which is caused by any halogenated hydrocarbon solvents.

铝电解电容器可能会被卤化烃类溶剂导致的腐蚀而损坏。

Please let us know in advance the solvent name and conditions for your PCB cleaning

请让我们事先了解贵司印刷线路板使用的清洗剂的名称和清洗条件。