CUSTOMER: **Ropla**

NO.: TC78025(2)

DISTRIBUTOR:

(PE48AA1)

APPROVE SHEET

[Compliance with RoHS]

PRODUCT: DC BRUSHLESS FAN

USER P/N:

Parts No.: KF0410B2S-012-243R

Printed model number on the stick: KF0410B2S--R

(SIGNATURE)

JAMICON GROUP

KAIMEI ELECTRONIC CORP.

	CHECKER	DESIGNER

CUSTOMER: **Ropla**
DISTRIBUTOR:
(PE48AA1)

NO.: TC78025(2)

APPROVE SHEET

[Compliance with RoHS]

PRODUCT: DC BRUSHLESS FAN

USER P/N: _____

Parts No.: KF0410B2S-012-243R

Printed model number on the stick: KF0410B2S--R

(SIGNATURE)

JAMICON GROUP
KAIMEI ELECTRONIC CORP.

	CHECKER	DESIGNER
KAIMEI ELECTRONIC (H.K.) LTD. 承認印	經理 李竹藍	課長 李波

1. MECHANICAL:

1-01	Dimension	Dimension of fan shall be shown in the outline styling drawing attached.
1-02	Motor	Four-pole motor.
1-03	Frame	Plastic material UL 94V-0 (P.B.T).
1-04	Impeller	Plastic material UL 94V-0 (P.B.T).
1-05	Free drop shock	In minute package condition, the fan should withstand each one drop of three faces from 30cm distance height onto 10 mm thickness of wooden board.

2.ELECTRICAL:

2-01	Rated current	Rated current shall be measured after 30 minutes continuous rotation at rated voltage.
2-02	Start voltage	The voltage that enable to start the fan by sudden switch on.
2-03	Rated Speed	Rated speed shall be measured after 30 minutes continuous rotation at rated voltage.
2-04	Input Power	Input power shall be measured after 30 minutes continuous rotation at rated voltage.
2-05	Lock Current	Locked current shall be measured Within one minute at rotor locked, after 30 minutes continuous rotation at rated voltage in clear air.
2-06	Insulation resistance	More than 10M ohm at 500 V.D.C between lead and housing.
2-07	Dielectric strength	Measured 5 mA(max) trip current at 700 V.A.C for 3 sec. between lead and housing.
2-08	Locked motor protection	Designed to meet UL, CUL and TUV.

3.CHARACTERISTICS:

3-01	Air Flow & Static Pressure	The air flow data and static pressures should be determined in accordance with AMCA standard or DIM 24163 specification in a double- chamber testing with intake-side measurement.
3-02	Noise level	The measurement of noise level is carried out with reference to DIM 45635 in an echoic chamber with the microphone positioned 1 M from the air intake. Testing fan shall be hung in clean air.

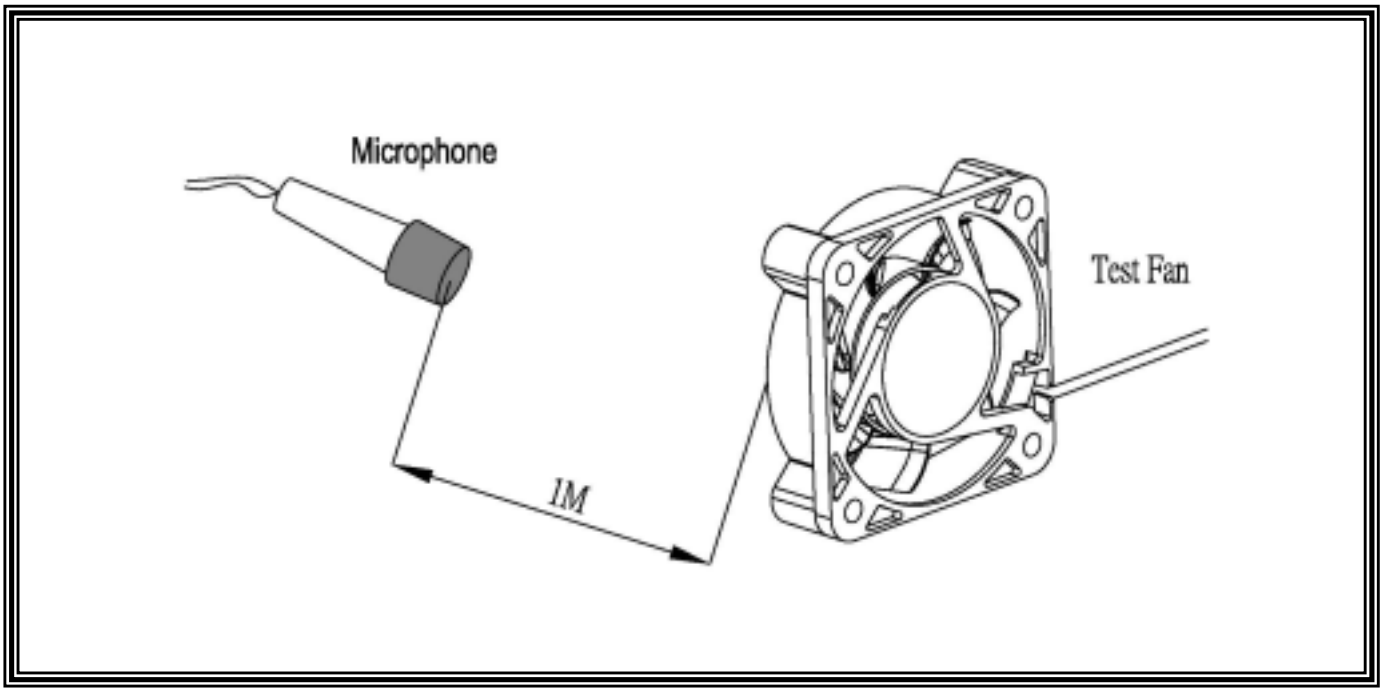

4.ENVIRONMENTAL:

4-01	Operating temperature	-10℃ to 70℃ (ordinary humidity)
4-02	Storage Temperature	-40℃ to 70℃ (ordinary humidity)
4-03	Humidity	After 96 hrs, 95% RH 40±2℃per MIL-STD-202F method 103B, Humidity test , The measured data of insulation resistance & dielectric strength should meet the specification listed in attach.
4-04	Thermal Shock	After thermal shock test per MIL-STD-202F method 107D, Condition D, The measured data of insulation resistance & dielectric strength should the specification

5.DATA-SHEET:
MODEL: KF0410B2S-012-243R
5-1. SPECIFICATION:

NO.	ITEM	SPECIFICATION	UNIT	CONDITION
5-1-01	Dimension	40*40*10	mm	----------
5-1-02	Bearing	Dual Ball	---------	----------
5-1-03	Rated Voltage	24	VDC	----------
5-1-04	Operating Voltage	20.4~27.6	VDC	----------
5-1-05	Start Voltage	12	VDC	On/off test
5-1-06	Speed	6600	R.P.M	±10%,At rated Voltage
5-1-07	Input Current	0.06	Amp	At rated Voltage
5-1-08	Input Power	1.44	Watt	At rated Voltage
5-1-09	Nominal Power	1.4	Watt	At rated Voltage
5-1-10	Air Flow	6.58	CFM	At 0 static Pressure of rated speed
5-1-11	Static Pressure	0.148	inchH_2O	At 0 air flow of rated speed
5-1-12	Noise	30.6	dBA	At rated speed
5-1-13	Life Expectancy	50,000	Hours	At 25℃&RH65%
5-1-14	Motor protection	Impedance protected		
5-1-15	Polarity protection	Providing 15 minutes protection while reverse input.		
5-1-16	Auto Restart	NO	--------	----------
5-1-17	Speed Signal output	NO	--------	----------
5-1-18	Alarm Signal output	NO	--------	----------
5-1-19	Rotation direction	From the label side	--------	Clockwise
5-1-20	Weight	14	Gram	Per each piece
5-1-21	Safety Certificate	UL, CUL, TUV, CE	--------	----------

5-2. LEAD WIRE:

NO.	ITEM	CONDITION			
5-2-01	AWG NO. & Authorize	26AWG, UL1007			
5-2-02	Color	—	+		
		Black	Red		
5-2-03	Line Length	280±10mm			
5-2-04	Connector	Notes as: Not included in this lead wire.			
5-2-05	Tube	NO			

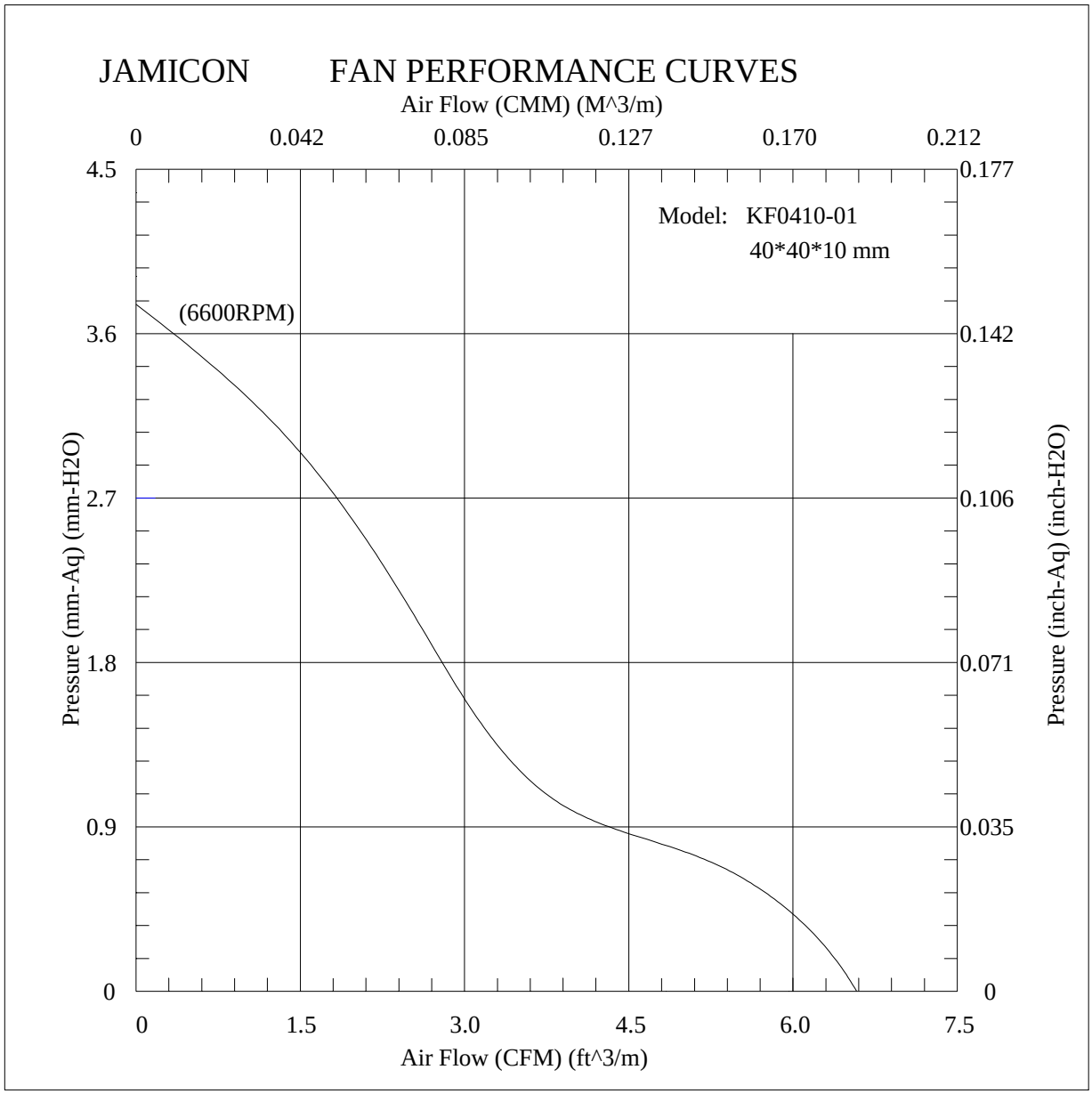
JAMICON FAN PERFORMANCE CURVES
Air Flow (CMM) (M^3/m)
0
0.042
0.085
0.127
0.170
0.212
4.5
3.6
2.7
1.8
0.9
0
0.177
0.142
0.106
0.071
0.035
0
Model: KF0410-01
40*40*10 mm
(6600RPM)
Pressure (mm-Aq) (mm-H2O)
Pressure (inch-Aq) (inch-H2O)
0
1.5
3.0
4.5
6.0
7.5
Air Flow (CFM) (ft^3/m)

風扇振動噪音性能測試報告
(The Test Report of Fan Vibration and Noise)

風扇型號(Sample Type) : **KP0410B2S**
基本規格(Properties) : DC 24V 7葉 4極 6600RPM

測試日期(Test Date) : 2006/3/14 PM 02:32:48
測試編號(Test No.) : (2)

測試條件(Test Conditions)

輸入電壓(Input Voltage) :	24 V
量測時間(Measuring Time) :	20 sec
麥克風距離(Mic. Distance) :	100 cm
麥克風角度(Mic. Angle) :	180°
頻域加權(Freq. Weighting) :	A
時域加權(Time Weighting) :	SLOW
背景噪音(Background Noise) :	15.0 dB(A)
溫度(Temperature) :	℃
相對濕度(Relative Humidity) :	%

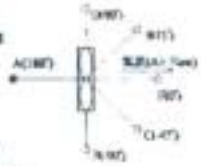

測試結果(Test Results)

電壓(Passing Voltage) :	
電流(Electric Current) :	
消耗功率(Power Dissipation) :	
轉速(Rotation Speed) :	6608 RPM
振動量(Vibration Level) (依據 ISO 2372)	
振動速度(Vib. Velocity) :	0.48 mm/sec RMS
均能聲壓位準(Time-averaged SPL, Leq) (依據 CNS 8753)	
量測點(At Meas. Point) :	29.5 dB(A)
1 米處(At 1m Point) :	29.3 dB(A)
最大聲壓位準(MaxL) :	29.9 dB(A)
最小聲壓位準(MinL) :	28.8 dB(A)

振動加速度頻譜圖(Vibration Acceleration Narrow-band Spectrum)

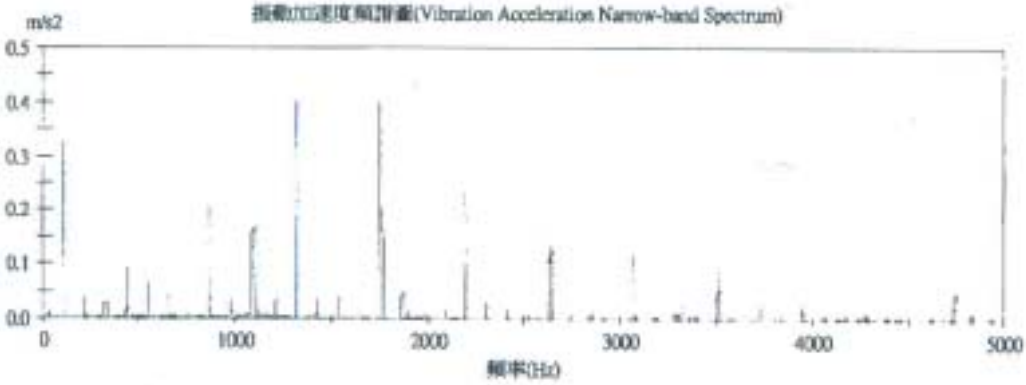

聲壓位準頻譜圖(Sound Pressure Level Octave-band Spectrum)

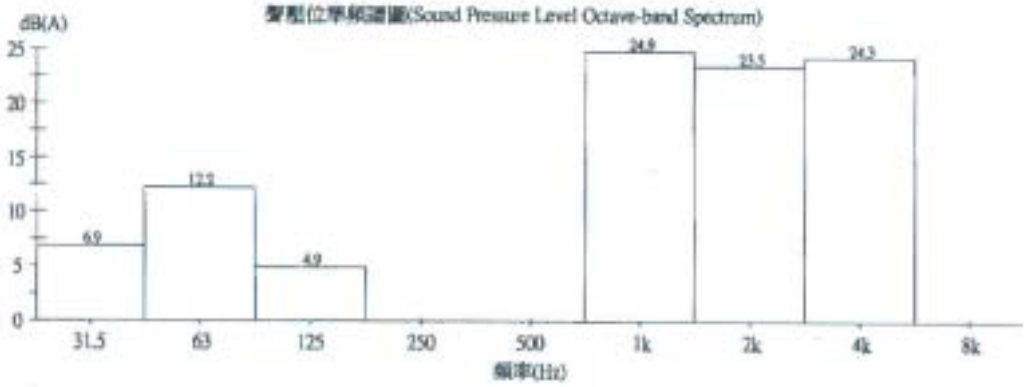

簽核人員 : _____　　操作員 : 簽章 : _____

系統開發(Developer) : 工業技術研究院 機械工業研究所(MIRL/ITRI)　　2006/3/14 PM 02:40:24 列印

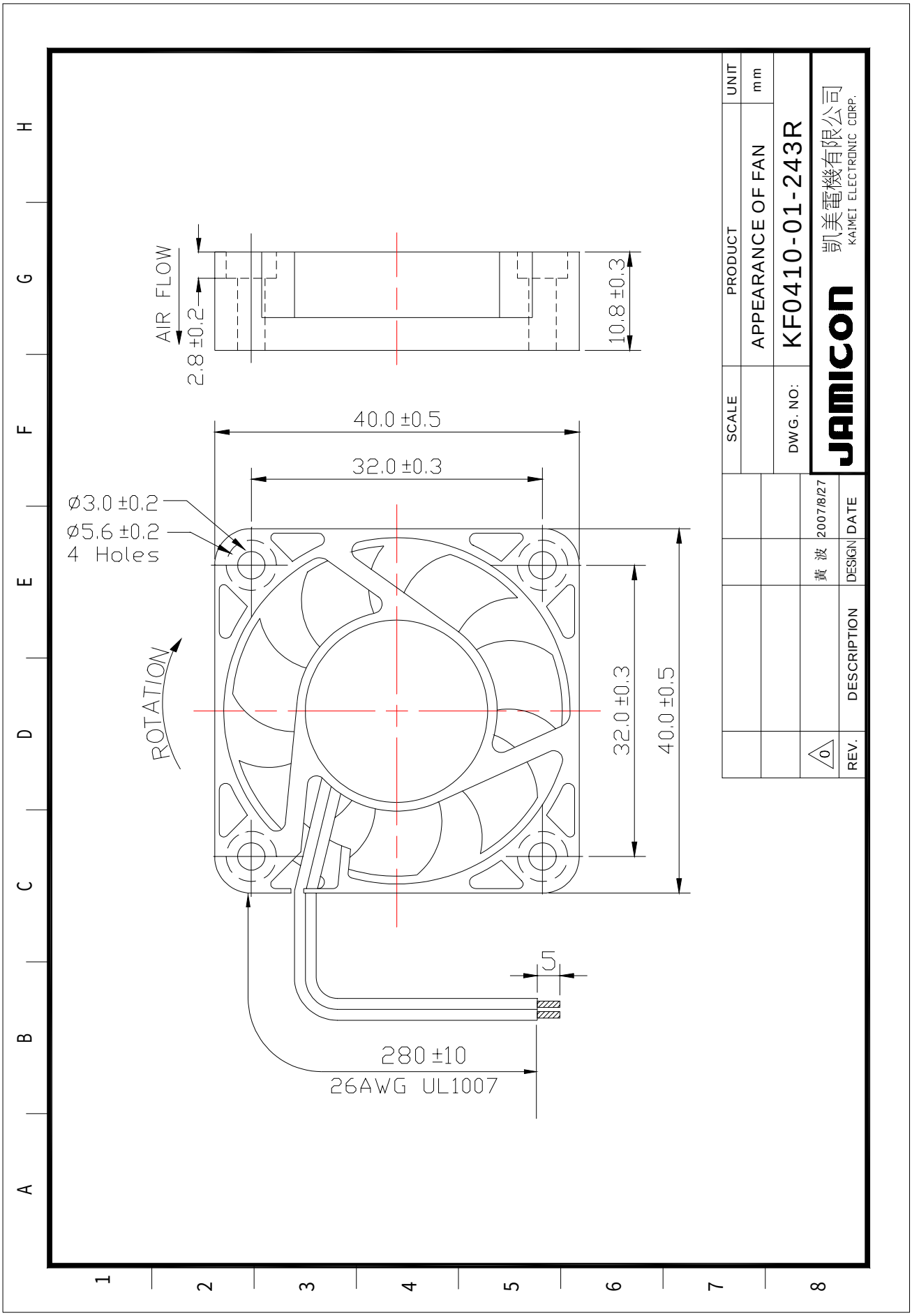
AIR FLOW
2.8 ±0.2
10.8 ±0.3
40.0 ±0.5
32.0 ±0.3
ø3.0 ±0.2
ø5.6 ±0.2
4 Holes
ROTATION
32.0 ±0.3
40.0 ±0.5
5
280 ±10
26AWG UL1007
PRODUCT
APPEARANCE OF FAN
UNIT
mm
SCALE
DWG. NO:
KF0410-01-243R
JAMICON
凱美電機有限公司
KAIMEI ELECTRONIC CORP.
REV.
DESCRIPTION
DESIGN
DATE
0
黃 波
2007/8/27

GPWV2.E156480
Fans, Electric - Component

Page Bottom

Fans, Electric - Component

See General Information for Fans, Electric - Component

KAIMEI ELECTRONIC CORP E156480
13TH
81 HSIN-TAI-WU RD, SEC 1
HSICHIH, TAIPEI HSIEN 221 TAIWAN

AC fans, Models JA1203811XX, JA1203822XX, where XX is any character; Model JA1738 followed by H2 or H1; Model JA1238 followed by M2, M1, L2 or L1; Model JA1225 followed by L2 or L1; Models JA0825H1(X1)(X2)(X3), JA0825H2(X1)(X2)(X3), JA0838H1(X1)(X2)(X3), JA0838H2(X1)(X2)(X3), JA0925H1(X1)(X2)(X3), JA0925H2(X1)(X2)(X3), JA1225H1(X1)(X2)(X3), JA1225H2(X1)(X2)(X3), JA1225L1(X1)(X2)(X3), JA1225L2(X1)(X2)(X3), JA1238H1(X1)(X2)(X3), JA1238H2(X1)(X2)(X3), JA1238M1(X1)(X2)(X3), JA1238M2(X1)(X2)(X3), JA1238L1(X1)(X2)(X3), JA1238L2(X1)(X2)(X3), JA1738H1(X1)(X2)(X3), JA1738H2(X1)(X2)(X3), JA1751H1(X1)(X2)(X3), JA1751H2(X1)(X2)(X3), JA0938H1(X1)(X2)(X3), JA0938H2(X1)(X2)(X3), JA2589H1(X1)(X2)(X3), JA2589H2(X1)(X2)(X3), JA1538H1(X1)(X2)(X3), JA1538H2(X1)(X2)(X3), JA1538M1(X1)(X2)(X3), JA1538M2(X1)(X2)(X3), JA1538L1(X1)(X2)(X3), JA1538L2(X1)(X2)(X3), LA1238H1(X1)(X2)(X3), LA1238H2(X1)(X2)(X3), LA1238M1(X1)(X2)(X3), LA1238M2(X1)(X2)(X3), LA1238L1(X1)(X2)(X3), LA1238L2(X1)(X2)(X3), LA0925H1(X1)(X2)(X3), LA0925H2(X1)(X2)(X3), LA0825H1(X1)(X2)(X3), LA0825H2(X1)(X2)(X3), where (X1), (X2), (X3) may be 0 thru 9, A thru Z, "-" or blank.

Models MA0825H2Bzz, MA0825H2Szz, MA0825M2Bzz, MA0825M2Szz, MA0838H2Bzz, MA083H2Szz, MA0838M2Bzz, MA0838M2Szz, MA0925H2Bzz, MA0925H2Szz, MA0925M2Bzz, MA0925M2Szz, MA0938H2Bzz, MA0938H2Szz, MA0938M2Bzz, MA0938M2Szz, KA0938H2Bzz, KA0938H2Szz, KA0938M2Bzz, KA0938M2Szz, MA1225H2Bzz, MA1225H2Szz, MA1225M2Bzz, MA1225M2Szz, KA1338H2Bzz, KA1338H2Szz, KA1338M2Bzz, KA1338M2Szz, KA1338L2Bzz, KA1338L2Szz, MA1338H2Bzz, MA1338H2Szz, MA1338M2Bzz, MA1338M2Szz, MA2260H2Bzz, MA0825H1Bzz, MA0825H1Szz, MA0825M1Bzz, MA0825M1Szz, MA0838H1Bzz, MA0838H1Szz, MA0838M1Bzz, MA0838M1Szz, MA0925H1Bzz, MA0925H1Szz, MA0925M1Bzz, MA0925M1Szz, MA0938H1Bzz, MA0938H1Szz, MA0938M1Bzz, MA0938M1Szz, KA0938H1Bzz, KA0938H1Szz, KA0938M1Bzz, KA0938M1Szz, MA1225H1Bzz, MA1225H1Szz, MA1225M1Bzz, MA1225M1Szz, KA1338H1Bzz, KA1338H1Sz, KA1338M1Bzz, KA1338M1Szz, KA1338L1Bzz, KA1338L1Szz, MA1338H1Bzz, MA1338H1Szz, MA1338M1Bzz, MA1338M1Szz, MA2260H1Bzz.

Models JA1751H1, JA1751H2, JA1238H1, JA1238H2, JA1238L1H1, JA1238L1H2, JA1225H1, JA1225H2, JA0925H1, JA0925H2, JA0838H1, JA0838H2, JA0825H1, JA0825H2.

Model KAX (A) (B) X_1 and/or X_2, where X may be 0825, 0838, 0925, 1225, 1238 or 1751, (A) may be H1, H2, M1, M2, L1 or L2, (B) may be B or S and X_1, X_2 may be 0 thru 9, A thru Z, blank or "-"; Model MAX (A) (B) X_1 and/or X_2, where X may be 1238, 1538, 1738, 1751, 1755 or 2589, (A) may be H1, H2, M1 or M2, (B) may be B, S and X_1, X_2 may be 0 thru 9, A thru Z or "-".

DC fans Models JF0207, JF0307, JF0407 followed by B or S, followed by -1HX, -1LX, -1MX, -5HX, -5LM or -5MX; Model JF0210 followed by B, C or S, followed by -5LXXX; Model JF0410 followed by B, C or S, followed by -1XXX, -1MXXX, -1HXXX or -5MXXX; Model JF0413 followed by B, C, H, F or S, followed by -1MXXX or -1HXXX; Model JF0512 followed by B, C or S, followed by -1LXXX or -1MXXX; Model JF0615 followed by B, C or S, followed by -1HXXX, -1LXXX or -1MXXX, -1EXXX, -1VXXX; Model JF0620 followed by B, C, H, F or S, followed by 1VXXX, -1EXXX, 1LXXX, -1MXXX, -1HXXX, -2VXXX, -2EXXX, -2LXXX, -2HXXX or -2MXXX; Model JF0625 followed by B, C, H, F or S, followed by -1VXXX, -1EXXX, -1LXXX, -1MXXX, -1HXXX, -2VXXX, -2EXXX, -2LXXX, -2MXXX or -2HXXX; Model JF0825 followed by B, C or S, followed by -1EXXX, -1LXXX, -1MXXX, -1HXXX, -2EXXX, -2LXXX, -2MXXX or -2HXXX; where "X" may be 0 thru 9, A thru Z, "-" or blank; Model JF0925 followed by B, C or S, followed by 1EXXX, -1LXXX, -1MXXX, -1HXXX, -2EXXX, -2LXXX, -2MXXX or -2HXXX; Model JF1225 followed by B, C or S, followed by -1EXXX -1LXXX, -1MXXX, -1HXXX, -2EXXX, -2LXXX, -2MXXX or -2HXXX; Model JH0410S1.

Models JF0210, JF0410, JF0510 followed by B or S, may be followed by 1H, 1M, 1L, 5L, 5M.

Model JF0615(X)2(Y)XXX, where (X) may be S, B or C and (Y) may be H, M, L, E or V.

Models JF0210(X)1H(Y), JF0210(X)1M(Y), JF0210(X)5H(Y), JF0210(X)5L(Y), JF0210(X)5M(Y), where (X) may be B, C or S and (Y) may be 0 thru 9, A thru Z or blank.

Models JF0310(X)1H(Y), JF0310(X)1L(Y), JF0310(X)1M(Y), JF0310(X)5H(Y), JF0310(X)5L(Y), JF0310(X)5M(Y), where (X) may

be B, C or S and (Y) may be 0 thru 9, A thru Z or blank.

Models JF0A08(X)5H(Y), JF0A08(X)5L(Y), JF0A08(X)5M(Y), where (X) may be B, C or S and (Y) may be 0 thru 9, A thru Z or blank.

Models JF0B10(X)1H(Y), JF0B10(X)1L(Y), JF0B10(X)1M(Y), JF0B10(X)5H(Y), JF0B10(X)5L(Y), JF0B10(X)5M(Y), where (X) may be B, C or S and (Y) may be 0 thru 9, A thru Z or blank.

Model JF1751(X)4S(Y), where (X) may be B, C or S and (Y) may be 0 thru 9, A thru Z or blank.

Models KF0210S5L, KF0210S5M, KF0210S5H, KF0210B5L, KF0210B5M, KF0210B5H, KF0210B5LD, KF0210B5MD, KF0210B5HD, KF0310S5L, KF0310S5M, KF0310B5L, KF0310B5M, KF0310B5H, KF0310B5LD, KF0310B5MD, KF0310B5HD, KF0410S5L, KF0410S5M, KF0410S5H, KF0410B5L, KF0210B1H, KF0210B1LD, KF0210B1MD, KF0210B1HD, KF0310S1L, KF0310S1M, KF0310S1H, KF0310B1L, KF0310B1M, KF0310B1H, KF0310B1LD, KF0310B1MD, KF0310B1HD, KF0410S1L, KF0410S1M, KF0410S1H, KF0410B1L, KF0410B1M, KF0410B1H, KF0410B1LD, KF0410B1MD, KF0410B1HD, KF0306S1M, KF0306S1H, KF0306B1M, KF0306B1H, KF0406S1M, KF0406S1H, KF0406B1M, KF0406B1H, KF0409S1L, KF0409S1M, KF0409S1H, KF0409B1L, KF0409B1M, KF0409B1H, KF0409B1LD, KF0409B1MD, KF0409B1HD, KF0510S1L, KF0510S1M, KF0510S1H, KF0510B1L, KF0510B1M, KF0510B1H, KF0510B1LD, KF0510B1MD, KF0510B1HD, KB3508S1M, KB3509S1H, KB3508B1M, KB3508B1H, KB4509S1M, KB4509S1H, KB4509B1M, KB4509B1H, KF0410B5M, KF0410B5H, KF0410B5LD, KF0410B5MD, KF0410B5HD, KF0306S5M, KF0306S5H, KF0306B5M, KF0306B5H, KF0406S5M, KF0406S5H, KF0406B5M, KF0406B5H, KF0409S5L, KF0409S5M, KF0409S5H, KF0409B5L, KF0409B5M, KF0409B5H, KF0409B5LD, KF0409B5MD, KF0409B5HD, KF0509S5L, KF0509S5M, KF0509S5H, KF0509B5L, KF0509B5M, KF0509B5H, KF0509B5LD, KF0509B5MD, KF0509B5HD, KB3508S5M, KB3508S5H, KB3508B5M, KB3508B5H, KB4509S5M, KB4509S5H, KB4509B5M, KB4509B5H, KF0210S1L, KF0210S1M, KF0210S1H, KF0210B1L, KF0210B1M, KF0210H5L, KF0210H5M, KF0210H5H, KF0210F5L, KF0210F5M, KF0210F5H, KF0210H1L, KF0210H1M, KF0210H1H, KF0210F1L, KF0210F1M, KF0210F1H, KF0310H5L, KF0310H5M, KF0310H5H, KF0310F5L, KF0310F5M, KF0310F5H, KF0310H1L, KF0310H1M, KF0310H1H, KF0310F1L, KF0310F1M, KF0310F1H, KF0410H1L, KF0410H1M, KF0410H1H, KF0410F1L, KF0410F1M, KF0410F1H, KF0410H5L, KF0410H5M, KF0410H5H, KF0410F5L, KF0410F5M, KF0410F5H, KF0510C1H, KF0510H1L, KF0510H1M, KF0510H1H, KF0510F1L, KF0510F1M, KF0510F1H. All models may have optional suffix "x4x5x6", where "x4", "x5", and "x6" may be A Z, 0 9, "-" or blank.

Model KF0xyz, where x may be 420, 515 or 610, y may be B1, B2, B5, S1, S2 or S5 and z may be H, HC, HD, HS, L, LC, LD, LS, M, MC, MD or MS; Model KF123xyz, where x may be 2 or 8, y may be B1, B2, B5, S1, S2 or S4 and z may be H, HA, L, LA, M or MA; Model MF0xyz where x may be 410 or 510, y may be B1, B5, S1 or S5 and z may be H, HC, HD, HS, L, LC, LD, LS, M, MC, MD or MS.

Models KF0210S5L, KF0210S5M, KF0210S5H, KF0210B5L, KF0210B5M, KF0210B5H, KF0210C5L, KF0210C5M, KF0210C5H, KF0210S1L, KF0210S1M, KF0210S1H, KF0210B1L, KF0210B1M, KF0210B1H, KF0210C1L, KF0210C1M, KF0210C1H, KF0310S5L, KF0310S5M, KF0310S5H, KF0310B5L, KF0310B5M, KF0310B5H, KF0310C5L, KF0310C5M, KF0310C5H, KF0310S1L, KF0310S1M, KF0310S1H, KF0310B1L, KF0310B1M, KF0310B1H, KF0310C1L, KF0310C1M, KF0310C1H, KF0410S1L, KF0410S1M, KF0410S1H, KF0410B1L, KF0410B1M, KF0410B1H, KF0410C1L, KF0410C1M, KF0410C1H, KF0410S5L, KF0410S5M, KF0410S5H, KF0410B5L, KF0410B5M, KF0410B5H, KF0410C5L, KF0410C5M, KF0410C5H, KF0510S1L, KF0510S1M, KF0510S1H, KF0510B1L, KF0510B1M, KF0510B1H, KF0510C1L, KF0510C1M, KF0510C1H. All models may have optional suffix "x4x5x6", where "x4", "x5" and "x6" may be A thru Z, 0 thru 9, "-" or blank.

Models KF0306S1M, KF0306S1H, KF0306C1H, KF0306C1S, KF0306S5M, KF0306S5H, KF0306C5M, KF0306C5H, KF0409S1L, KF0409S1M, KF0409S1H, KF0409B1L, KF0409B1M, KF0409B1H, KF0409C1L, KF0409C1M, KF0409C1H, KF0409S5L, KF0409S5M, KF0409S5H, KF0409B5L, KF0409B5M, KF0409B5H, KF0409C5L, KF0409C5M, KF0409C5H, KF0509S5L, KF0509S5M, KF0509S5H, KF0509B5L, KF0509B5M, KF0509B5H, KF0509C5L, KF0509C5M, KF0509C5H. All models may have optional suffix "x4x5x6", where "x4", "x5" and "x6" may be A thru Z, 0 thru 9, "-" or blank.

Models KF0510S5L, KF0510S5M, KF0510S5H, KF0510C5L, KF0510C5M, KF0510C5H, KF0510B5L, KF0510B5M, KF0510B5H, KF0515S5H, KF0515S5M, KF0515S5L, KF0515C5L, KF0515C5M, KF0515C5H, KF0515B5L, KF0515B5M, KF0515B5H, KF0509B1H, KF0509B1L, KF0509B1M, KF0509S1H, KF0509S1L, KF0509S1M, KF0509C1H, KF0509C1L, KF0509C1M, KF0515S1L, KF0515S1M, KF0515S1H, KF0515C1L, KF0515C1M, KF0515C1H, KF0515B1L, KF0515B1M, KF0515B1H, KF0625S1L, KF0625S1M, KF0625S1H, KF0625C1L, KF0625C1M, KF0625C1H, KF0625B1L, KF0625B1M, KF0625B1H, KF0510F5L, KF0510F5M, KF0510F5H, KF0510H5L, KF0510H5M, KF0510H5H. All models may have optional suffix "x4x5x6", where "x4", "x5" and "x6" may be A thru Z, 0 thru 9, "-" or blank.

Models KF0407C1H, KF0407S1H, KF0407C1M, KF0407S1M, KF0407C5H, KF0407S5H, KF0407C5M, KF0407S5M, KF0C07C1H, KF0C07S1H, KF0C07C1M, KF0C07S1M, KF0C07C5H, KF0C07S5H, KF0C07C5M, KF0C07S5M, KF0420B1L, KF0420S1L, KF0420B1M, KF0420S1M, KF0420B1H, KF0420S1H, KF0420B5L, KF0420S5L, KF0420B5M, KF0420S5M, KF0420B5H, KF0420S5H, KF0610S1H, KF0610C1H, KF0610B1H, KF0610C1M, KF0610B1M, KF0610S1M, KF0610C1L, KF0610B1L, KF0610S1L, KF0420C1L, KF0420H1L, KF0420F1L, KF0420C1M, KF0420H1M, KF0420F1M, KF0420C1H, KF0420H1H, KF0420F1H, KF0420C5L, KF0420H5L, KF0420F5L, KF0420C5M, KF0420H5M, KF0420F5M, KF0420C5H, KF0420H5H, KF0420F5H, KF0610H1H, KF0610H1M, KF0610H1L, KF0610F1H, KF0610F1M, KF0610F1L. All models may have optional suffix "x4x5x6", where "x4", "x5" and "x6" may be A thru Z, 0 thru 9, "-" or blank.

Models JF0515(A1)1(B)XXX, JF0515(A1)2(B)XXX, JF0615(A)5(C)XXX, JF0615(A)1(D)XXX, JF0615(A)2(D)XXX, JF0620(A)1(D)XXX, JF0620(A)2(D)XXX, JF0625(A1)1(F)XXX, JF0625(A1)2(E)XXX, JF0625(A)4(F)XXX, JF0825(A1)1(D)XXX, JF0825(A1)2(E)XXX, JF0825(A1)4(G)XXX, JF0925(A1)1(D)XXX, JF0925(A1)2(D)XXX, JF0925(A1)4(I)XXX, JF1225(A1)1(D)XXX, JF1225(A1)2(D)XXX, JF1225(A1)4(F)XXX, where (A) may be B, C or S, (B) may be H, M, L or E, (C) may be H, M, L, E or V, (D) may be U or S, (E) may be T, U or S, (F) may be U, S, H, M, L or E, (G) may be U, S, H, M or L, (H) may be S, H, M or L, (I) may be S, H, M, L or E and "X" may be 0 thru 9, A thru Z, blank or "-", (A1) may be B, C, S, H or F.

Models KF0420(A)2(B)(C), KF1225(A)1(D)(C), where (A) may be B, S, C, F or H, (B) may be L, M, H or S, (D) may be V, E, L, M or H and (C) may be XXX, where X may be 0 thru 9, A thru Z, "-" or blank.

Models LF0825(a)1(c)(f)(g)(h)(i)(j), LF0925(b)1(d)(f)(g)(h)(i)(j) and LF1225(b)1(e)(f)(g)(h)(i)(j) series, where (a) may be S, B or C; (b) may be S or B; (c) may be S, H, M, L or E; (d) may be H, M, L or E; (e) may be H, M, L, E or V; (f) may be " " or 0 thru 9 or A thru Z; (g) may be 0 thru 4; (h) may be " " or 0 thru 9 or A thru Z; (i) may be blank, "-" or 0 thru 9 or A thru Z; (j) may be blank, " " or 0 thru 9 or A thru Z.

AC component fans, Models JA1238(a)(c)(b)(x)(y), JA1238HD(b)(x)(y), KA1238(a)(c)(b)(x)(y) and KA1238HD(b)(x)(y) series, where (a) may be H, M or L; (c) may be 1 or 2; (b) may be B or S; (x) and (y) may be blank, "-", 0~9 or A~Z.

DC Component Fans , Models KF0B10(b)5(r1)(xy)(z), KF0B10(b)1(r1)(xy)(z), KF0410(b)2(r6)(xy)(z), KF0510(b)2(r2)(xy)(z), KF0610(b)5(r3)(xy)(z), KF0615(b)5(r3)(xy)(z), KF0615(b)1(r4)(xy)(z), KF0615(b)2(r4)(xy)(z), KF0620(b)1(r5)(xy)(z), KF0620(b)2(r5)(xy)(z), KF0715(b)1S(xy)(z), KF0715(b)1(r2)(xy)(z), KF0820(b)1(r7)(xy)(z), KF0820(b)2(r7)(xy)(z), KF1225(b)2(r2)(xy)(z), JF0815(b)1(r8)(xy)(z), JF0815(b)2(r8)(xy)(z), JF1238(b)1(r1)(xy)(z), JF1238(b)2(r1)(xy)(z) and JF1238(b)4(r6)(xy)(z) series, where (b) may be S, B, C, H or F; (r1) may be S, H, M, L or E; (r2) may be H, M or L; (r3) may be M, L, E or V; (r4) may be U, S, H, M, L, E or V; (r5) may be S, H, M, L, E or V; (r6) may be S, H, M or L; (r7) may be U, S, H, M, L or E; (r8) may be U, S, H, M or L; (xy) is alphanumeric combination of two digits and/or alphabets, each may be blank, "-", A through Z or 0 through 9; (z) may be blank, "-", A through Z or 0 through 9.

AC component fans , Models JA1225H1(b)(x)(y), JA1225L1(b)(x)(y), JA0925H1(b)(x)(y), JA0838H1(b)(x)(y), JA0825H1(b)(x)(y), JA1225H2(b)(x)(y), JA1225L2(b)(x)(y), JA0925H2(b)(x)(y), JA0838H2(b)(x)(y), JA0825H2(b)(x)(y) series, where (b) may be B or S; (x) and (y) may be blank, "-", 0~9 or A~Z.

Marking: Company name, "E156480", trademark JAMICON or JAMICON® and model designation.

Last Updated on 2006-12-12

Questions? Notice of Disclaimer Page Top

GPWV8.E156480
Fans, Electric Certified for Canada - Component

Page Bottom

Fans, Electric Certified for Canada - Component

See General Information for Fans, Electric Certified for Canada - Component

KAIMEI ELECTRONIC CORP E156480
13TH
81 HSIN-TAI-WU RD, SEC 1
HSICHIH, TAIPEI HSIEN 221 TAIWAN

AC fans, Models JA1203811XX, JA1203822XX, where XX is any character; Model JA1738 followed by H2 or H1; Model JA1238 followed by M2, M1, L2 or L1; Model JA1225 followed by L2 or L1; Models JA0825H1(X1)(X2)(X3), JA0825H2(X1)(X2)(X3), JA0838H1(X1)(X2)(X3), JA0838H2(X1)(X2)(X3), JA0925H1(X1)(X2)(X3), JA0925H2(X1)(X2)(X3), JA1225H1(X1)(X2)(X3), JA1225H2(X1)(X2)(X3), JA1225L1(X1)(X2)(X3), JA1225L2(X1)(X2)(X3), JA1238H1(X1)(X2)(X3), JA1238H2(X1)(X2)(X3), JA1238M1(X1)(X2)(X3), JA1238M2(X1)(X2)(X3), JA1238L1(X1)(X2)(X3), JA1238L2(X1)(X2)(X3), JA1738H1(X1)(X2)(X3), JA1738H2(X1)(X2)(X3), JA1751H1(X1)(X2)(X3), JA1751H2(X1)(X2)(X3), JA0938H1(X1)(X2)(X3), JA0938H2(X1)(X2)(X3), JA2589H1(X1)(X2)(X3), JA2589H2(X1)(X2)(X3), JA1538H1(X1)(X2)(X3), JA1538H2(X1)(X2)(X3), JA1538M1(X1)(X2)(X3), JA1538M2(X1)(X2)(X3), JA1538L1(X1)(X2)(X3), JA1538L2(X1)(X2)(X3), LA1238H1(X1)(X2)(X3), LA1238H2(X1)(X2)(X3), LA1238M1(X1)(X2)(X3), LA1238M2(X1)(X2)(X3), LA1238L1(X1)(X2)(X3), LA1238L2(X1)(X2)(X3), LA0925H1(X1)(X2)(X3), LA0925H2(X1)(X2)(X3), LA0825H1(X1)(X2)(X3), LA0825H2(X1)(X2)(X3), where (X1), (X2), (X3) may be 0 thru 9, A thru Z, "-" or blank.

Models MA0825H2Bzz, MA0825H2Szz, MA0825M2Bzz, MA0825M2Szz, MA0838H2Bzz, MA083H2Szz, MA0838M2Bzz, MA0838M2Szz, MA0925H2Bzz, MA0925H2Szz, MA0925M2Bzz, MA0925M2Szz, MA0938H2Bzz, MA0938H2Szz, MA0938M2Bzz, MA0938M2Szz, KA0938H2Bzz, KA0938H2Szz, KA0938M2Bzz, KA0938M2Szz, MA1225H2Bzz, MA1225H2Szz, MA1225M2Bzz, MA1225M2Szz, KA1338H2Bzz, KA1338H2Szz, KA1338M2Bzz, KA1338M2Szz, KA1338L2Bzz, KA1338L2Szz, MA1338H2Bzz, MA1338H2Szz, MA1338M2Bzz, MA1338M2Szz, MA2260H2Bzz, MA0825H1Bzz, MA0825H1Szz, MA0825M1Bzz, MA0825M1Szz, MA0838H1Bzz, MA0838H1Szz, MA0838M1Bzz, MA0838M1Szz, MA0925H1Bzz, MA0925H1Szz, MA0925M1Bzz, MA0925M1Szz, MA0938H1Bzz, MA0938H1Szz, MA0938M1Bzz, MA0938M1Szz, KA0938H1Bzz, KA0938H1Szz, KA0938M1Bzz, KA0938M1Szz, MA1225H1Bzz, MA1225H1Szz, MA1225M1Bzz, MA1225M1Szz, KA1338H1Bzz, KA1338H1Sz, KA1338M1Bzz, KA1338M1Szz, KA1338L1Bzz, KA1338L1Szz, MA1338H1Bzz, MA1338H1Szz, MA1338M1Bzz, MA1338M1Szz, MA2260H1Bzz.

Models JA1751H1, JA1751H2, JA1238H1, JA1238H2, JA1238-1H1, JA1238-1H2, JA1225H1, JA1225H2, JA0925H1, JA0925H2, JA0838H1, JA0838H2, JA0825H1, JA0825H2.

Model KAX (A) (B) X_1 and/or X_2, where X may be 0825, 0838, 0925, 1225, 1238 or 1751, (A) may be H1, H2, M1, M2, L1 or L2, (B) may be B or S and X_1, X_2 may be 0 thru 9, A thru Z, blank or "-"; Model MAX (A) (B) X_1 and/or X_2, where X may be 1238, 1538, 1738, 1751, 1755 or 2589, (A) may be H1, H2, M1 or M2, (B) may be B, S and X_1, X_2 may be 0 thru 9, A thru Z or "-".

DC fans Models JF0207, JF0307, JF0407 followed by B or S, followed by -1HX, -1LX, -1MX, -5HX, -5LM or -5MX; Model JF0210 followed by B, C or S, followed by -5LXXX; Model JF0410 followed by B, C or S, followed by -1XXX, -1MXXX, -1HXXX or -5MXXX; Model JF0413 followed by B, C or S, followed by -1MXXX or -1HXXX; Model JF0512 followed by B, C or S, followed by -1LXXX or -1MXXX; Model JF0615 followed by B, C or S, followed by -1HXXX, -1LXXX or -1MXXX, -1EXXX, -1VXXX; Model JF0620 followed by B, C or S, followed by 1VXXX, -1EXXX, 1LXXX, -1MXXX, -1HXXX, -2VXXX, -2EXXX, -2LXXX, -2HXXX or -2MXXX; Model JF0625 followed by B, C or S, followed by -1VXXX, -1EXXX, -1LXXX, -1MXXX, -1HXXX, -2VXXX, -2EXXX, -2LXXX, -2MXXX or -2HXXX; Model JF0825 followed by B, C or S, followed by -1EXXX, -1LXXX, -1MXXX, -1HXXX, -2EXXX, -2LXXX, -2MXXX or -2HXXX; where "X" may be 0 thru 9, A thru Z, "-" or blank; Model JF0925 followed by B, C or S, followed by 1EXXX, -1LXXX, -1MXXX, -1HXXX, -2EXXX, -2LXXX, -2MXXX or -2HXXX; Model JF1225 followed by B, C or S, followed by -1EXXX -1LXXX, -1MXXX, -1HXXX, -2EXXX, -2LXXX, -2MXXX or -2HXXX; Model JH0410S1.

Models JF0210, JF0410, JF0510 followed by B or S, may be followed by 1H, 1M, 1L, 5L, 5M.

Model JF0615(X)2(Y)XXX, where (X) may be S, B or C and (Y) may be H, M, L, E or V.

Models JF0210(X)1H(Y), JF0210(X)1M(Y), JF0210(X)5H(Y), JF0210(X)5L(Y), JF0210(X)5M(Y), where (X) may be B, C or S and (Y) may be 0 thru 9, A thru Z or blank.

Models JF0310(X)1H(Y), JF0310(X)1L(Y), JF0310(X)1M(Y), JF0310(X)5H(Y), JF0310(X)5L(Y), JF0310(X)5M(Y), where (X) may

be B, C or S and (Y) may be 0 thru 9, A thru Z or blank.

Models JF0A08(X)5H(Y), JF0A08(X)5L(Y), JF0A08(X)5M(Y), where (X) may be B, C or S and (Y) may be 0 thru 9, A thru Z or blank.

Models JF0B10(X)1H(Y), JF0B10(X)1L(Y), JF0B10(X)1M(Y), JF0B10(X)5H(Y), JF0B10(X)5L(Y), JF0B10(X)5M(Y), where (X) may be B, C or S and (Y) may be 0 thru 9, A thru Z or blank.

Model JF1751(X)4S(Y), where (X) may be B, C or S and (Y) may be 0 thru 9, A thru Z or blank.

Models KF0210S5L, KF0210S5M, KF0210S5H, KF0210B5L, KF0210B5M, KF0210B5H, KF0210B5LD, KF0210B5MD, KF0210B5HD, KF0310S5L, KF0310S5M, KF0310B5L, KF0310B5M, KF0310B5H, KF0310B5LD, KF0310B5MD, KF0310B5HD, KF0410S5L, KF0410S5M, KF0410S5H, KF0410B5L, KF0210B1H, KF0210B1LD, KF0210B1MD, KF0210B1HD, KF0310S1L, KF0310S1M, KF0310S1H, KF0310B1L, KF0310B1M, KF0310B1H, KF0310B1LD, KF0310B1MD, KF0310B1HD, KF0410S1L, KF0410S1M, KF0410S1H, KF0410B1L, KF0410B1M, KF0410B1H, KF0410B1LD, KF0410B1MD, KF0410B1HD, KF0306S1M, KF0306S1H, KF0306B1M, KF0306B1H, KF0406S1M, KF0406S1H, KF0406B1M, KF0406B1H, KF0409S1L, KF0409S1M, KF0409S1H, KF0409B1L, KF0409B1M, KF0409B1H, KF0409B1LD, KF0409B1MD, KF0409B1HD, KF0510S1L, KF0510S1M, KF0510S1H, KF0510B1L, KF0510B1M, KF0510B1H, KF0510B1LD, KF0510B1MD, KF0510B1HD, KB3508S1M, KB3509S1H, KB3508B1M, KB3508B1H, KB4509S1M, KB4509S1H, KB4509B1M, KB4509B1H, KF0410B5M, KF0410B5H, KF0410B5LD, KF0410B5MD, KF0410B5HD, KF0306S5M, KF0306S5H, KF0306B5M, KF0306B5H, KF0406S5M, KF0406S5H, KF0406B5M, KF0406B5H, KF0409S5L, KF0409S5M, KF0409S5H, KF0409B5L, KF0409B5M, KF0409B5H, KF0409B5LD, KF0409B5MD, KF0409B5HD, KF0509S5L, KF0509S5M, KF0509S5H, KF0509B5L, KF0509B5M, KF0509B5H, KF0509B5LD, KF0509B5MD, KF0509B5HD, KB3508S5M, KB3508S5H, KB3508B5M, KB3508B5H, KB4509S5M, KB4509S5H, KB4509B5M, KB4509B5H, KF0210S1L, KF0210S1M, KF0210S1H, KF0210B1L, KF0210B1M, KF0210H5L, KF0210H5M, KF0210H5H, KF0210F5L, KF0210F5M, KF0210F5H, KF0210H1L, KF0210H1M, KF0210H1H, KF0210F1L, KF0210F1M, KF0210F1H, KF0310H5L, KF0310H5M, KF0310H5H, KF0310F5L, KF0310F5M, KF0310F5H, KF0310H1L, KF0310H1M, KF0310H1H, KF0310F1L, KF0310F1M, KF0310F1H, KF0410H1L, KF0410H1M, KF0410H1H, KF0410F1L, KF0410F1M, KF0410F1H, KF0410H5L, KF0410H5M, KF0410H5H, KF0410F5L, KF0410F5M, KF0410F5H, KF0510C1H, KF0510H1L, KF0510H1M, KF0510H1H, KF0510F1L, KF0510F1M, KF0510F1H. All models may have optional suffix "x4x5x6", where "x4", "x5", and "x6" may be A-Z, 0 9, "-" or blank.

Model KF0xyz, where x may be 420, 515 or 610, y may be B1, B2, B5, S1, S2 or S5 and z may be H, HC, HD, HS, L, LC, LD, LS, M, MC, MD or MS; Model KF123xyz, where x may be 2 or 8, y may be B1, B2, B5, S1, S2 or S4 and z may be H, HA, L, LA, M or MA; Model MF0xyz where x may be 410 or 510, y may be B1, B5, S1 or S5 and z may be H, HC, HD, HS, L, LC, LD, LS, M, MC, MD or MS.

Models KF0210S5L, KF0210S5M, KF0210S5H, KF0210B5L, KF0210B5M, KF0210B5H, KF0210C5L, KF0210C5M, KF0210C5H, KF0210S1L, KF0210S1M, KF0210S1H, KF0210B1L, KF0210B1M, KF0210B1H, KF0210C1L, KF0210C1M, KF0210C1H, KF0310S5L, KF0310S5M, KF0310S5H, KF0310B5L, KF0310B5M, KF0310B5H, KF0310C5L, KF0310C5M, KF0310C5H, KF0310S1L, KF0310S1M, KF0310S1H, KF0310B1L, KF0310B1M, KF0310B1H, KF0310C1L, KF0310C1M, KF0310C1H, KF0410S1L, KF0410S1M, KF0410S1H, KF0410B1L, KF0410B1M, KF0410B1H, KF0410C1L, KF0410C1M, KF0410C1H, KF0410S5L, KF0410S5M, KF0410S5H, KF0410B5L, KF0410B5M, KF0410B5H, KF0410C5L, KF0410C5M, KF0410C5H, KF0510S1L, KF0510S1M, KF0510S1H, KF0510B1L, KF0510B1M, KF0510B1H, KF0510C1L, KF0510C1M, KF0510C1H. All models may have optional suffix "x4x5x6", where "x4", "x5" and "x6" may be A thru Z, 0 thru 9, "-" or blank.

Models KF0510S5L, KF0510S5M, KF0510S5H, KF0510C5L, KF0510C5M, KF0510C5H, KF0510B5L, KF0510B5M, KF0510B5H, KF0515S5H, KF0515S5M, KF0515S5L, KF0515C5L, KF0515C5M, KF0515C5H, KF0515B5L, KF0515B5M, KF0515B5H, KF0509B1H, KF0509B1L, KF0509B1M, KF0509S1H, KF0509S1L, KF0509S1M, KF0509C1H, KF0509C1L, KF0509C1M, KF0515S1L, KF0515S1M, KF0515S1H, KF0515C1L, KF0515C1M, KF0515C1H, KF0515B1L, KF0515B1M, KF0515B1H, KF0625S1L, KF0625S1M, KF0625S1H, KF0625C1L, KF0625C1M, KF0625C1H, KF0625B1L, KF0625B1M, KF0625B1H, KF0510F5L, KF0510F5M, KF0510F5H, KF0510H5L, KF0510H5M, KF0510H5H. All models may have optional suffix "x4x5x6", where "x4", "x5" and "x6" may be A thru Z, 0 thru 9, "-" or blank.

Models KF0407C1H, KF0407S1H, KF0407C1M, KF0407S1M, KF0407C5H, KF0407S5H, KF0407C5M, KF0407S5M, KF0C07C1H, KF0C07S1H, KF0C07C1M, KF0C07S1M, KF0C07C5H, KF0C07S5H, KF0C07C5M, KF0C07S5M, KF0420B1L, KF0420S1L, KF0420B1M, KF0420S1M, KF0420B1H, KF0420S1H, KF0420B5L, KF0420S5L, KF0420B5M, KF0420S5M, KF0420B5H, KF0420S5H, KF0610S1H, KF0610C1H, KF0610B1H, KF0610C1M, KF0610B1M, KF0610S1M, KF0610C1L, KF0610B1L, KF0610S1L KF0420C1L, KF0420H1L, KF0420F1L, KF0420C1M, KF0420H1M, KF0420F1M, KF0420C1H, KF0420H1H, KF0420F1H, KF0420C5L, KF0420H5L, KF0420F5L, KF0420C5M, KF0420H5M, KF0420F5M, KF0420C5H, KF0420H5H, KF0420F5H, KF0610H1H, KF0610H1M, KF0610H1L, KF0610F1H, KF0610F1M, KF0610F1L. All models may have optional suffix "x4x5x6", where "x4", "x5" and "x6" may be A thru Z, 0 thru 9, "-" or blank.

Models JF0515(A1)1(B)XXX, JF0515(A1)2(B)XXX, JF0615(A)5(C)XXX, JF0615(A)1(D)XXX, JF0615(A)2(D)XXX, JF0620(A)1(D)XXX, JF0620(A)2(D)XXX, JF0625(A1)1(E)XXX, JF0625(A1)2(E)XXX, JF0625(A1)4(F)XXX, JF0825(A1)1(D)XXX, JF0825(A1)2(E)XXX, JF0825(A1)4(G)XXX, JF0925(A1)1(D)XXX, JF0925(A1)2(D)XXX, JF0925(A1)4(I)XXX, JF1225(A1)1(D)XXX, JF1225(A1)2(D)XXX, JF1225(A1)4(F)XXX, where (A) may be B, C or S, (B) may be H, M, L or F, (C) may be H, M, L, E or V, (D) may be U or S, (E) may be T, U or S, (F) may be U, S, H, M, L or E, (G) may be U, S, H, M or L, (H) may be S, H, M or L, (I) may be S, H, M, L or E and "X" may be 0 thru 9, A thru Z, blank or "-" , (A1) may be B, C, S, H or F.

Models KF0420(A)2(B)(C), KF1225(A)1(D)(C), where (A) may be B, S, C, F or H, (B) may be L, M, H or S, (D) may be V, E, L, M or H and (C) may be XXX, where X may be 0 thru 9, A thru Z, "-" or blank.

Models LF0825(a)1(c)(f)(g)(h)(i)(j), LF0925(b)1(d)(f)(g)(h)(i)(j) and LF1225(b)1(e)(f)(g)(h)(i)(j) series, where (a) may be S, B or C; (b) may be S or B; (c) may be S, H, M, L or F; (d) may be H, M, L or E; (e) may be H, M, L, E or V; (f) may be "-" or 0

thru 9 or A thru Z; (g) may be 0 thru 4; (h) may be "-" or 0 thru 9 or A thru Z; (i) may be blank, "-" or 0 thru 9 or A thru Z; (j) may be blank, " " or 0 thru 9 or A thru Z.

AC component fans, Models JA1238(a)(c)(b)(x)(y), JA1238HD(b)(x)(y), KA1238(a)(c)(b)(x)(y) and KA1238HD(b)(x)(y) series, where (a) may be H, M or L; (c) may be 1 or 2; (b) may be B or S; (x) and (y) may be blank, "-", 0~9 or A~Z.

DC Component Fans , Models KF0B10(b)5(r1)(xy)(z), KF0B10(b)1(r1)(xy)(z), KF0410(b)2(r6)(xy)(z), KF0510(b)2(r2)(xy)(z), KF0610(b)5(r3)(xy)(z), KF0615(b)5(r3)(xy)(z), KF0615(b)1(r4)(xy)(z), KF0615(b)2(r4)(xy)(z), KF0620(b)1(r5)(xy)(z), KF0620(b)2(r5)(xy)(z), KF0715(b)1S(xy)(z), KF0715(b)1(r2)(xy)(z), KF0820(b)1(r7)(xy)(z), KF0820(b)2(r7)(xy)(z), KF1225(b)2(r7)(xy)(z), JF0815(b)1(r8)(xy)(z), JF0815(b)2(r8)(xy)(z), JF1238(b)1(r1)(xy)(z), JF1238(b)2(r1)(xy)(z) and JF1238(b)4(r6)(xy)(z) series, where (b) may be S, B, C, H or F; (r1) may be S, H, M, L or E; (r2) may be H, M or L; (r3) may be M, L, E or V; (r4) may be U, S, H, M, L, E or V; (r5) may be S, H, M, L, E or V; (r6) may be S, H, M or L; (r7) may be U, S, H, M, L or E; (r8) may be U, S, H, M or L; (xy) is alphanumeric combination of two digits and/or alphabets, each may be blank, "-", A through Z or 0 through 9; (z) may be blank, " ", A through Z or 0 through 9.

AC component fans , Models JA1225H1(b)(x)(y), JA1225L1(b)(x)(y), JA0925H1(b)(x)(y), JA0838H1(b)(x)(y), JA0825H1(b)(x)(y), JA1225H2(b)(x)(y), JA1225L2(b)(x)(y), JA0925H2(b)(x)(y), JA0838H2(b)(x)(y), JA0825H2(b)(x)(y) series, where (b) may be B or S; (x) and (y) may be blank, "-", 0~9 or A~Z.

Marking: Company name, model designation and Recognized Component Mark for Canada, c ℓ u .
Last Updated on 2006-12-12

Questions? Notice of Disclaimer Page Top

ZERTIFIKAT ◆ CERTIFICATE ◆ СЕРТИФИКАТ ◆ CERTIFICADO ◆ CERTIFICAT

Product Service

CERTIFICATE

No. B 06 06 38493 015

Holder of Certificate: **Kaimei Electronic Corp.**
81,13F,Sec.1,Hsin-Tai-Wu Rd.,
Hsichih, Taipei Hsien
TAIWAN

Certification Mark:

Product: **Component fan**

The product was tested on a voluntary basis and complies with the essential requirements. The certification mark shown above can be affixed on the product. See also notes overleaf.

Test report no.: 612104127901

Date, 2006-06-30 Bill

Page 1 of 3

TÜV SÜD Product Service GmbH · Zertifizierstelle · Ridlerstrasse 65 · 80339 München · Germany

Attachment to the Certificate No. B 06 06 38493 015

Taiwan

The input ratings description of the models are as below:

Model-#	DC Ratings	Model-#	DC Ratings
KF0210S5Lxyz	5Vdc, 0.7W	KF0210S1Lxyz	12Vdc, 1.2W
KF0210S5Mxyz	5Vdc, 1.0W	KF0210S1Mxyz	12Vdc, 1.3W
KF0210S5Hxyz	5Vdc, 1.1W	KF0210S1Hxyz	12Vdc, 1.5W
KF0210B5Lxyz	5Vdc, 0.5W	KF0210C1Lxyz	12Vdc, 0.7W
KF0210B5Mxyz	5Vdc, 0.8W	KF0210C1Mxyz	12Vdc, 0.8W
KF0210B5Hxyz	5Vdc, 1.0W	KF0210C1Hxyz	12Vdc, 1.4W
KF0210C5Lxyz	5Vdc, 0.5W	KF0210B1Lxyz	12Vdc, 0.7W
KF0210C5Mxyz	5Vdc, 0.8W	KF0210B1Mxyz	12Vdc, 0.8W
KF0210C5Hxyz	5Vdc, 1.0W	KF0210B1Hxyz	12Vdc, 1.6W
KF0210H5Lxyz	5Vdc, 0.5W	KF0210H1Lxyz	12Vdc, 0.7W
KF0210H5Mxyz	5Vdc, 0.8W	KF0210H1Mxyz	12Vdc, 0.8W
KF0210H5Hxyz	5Vdc, 1.0W	KF0210H1Hxyz	12Vdc, 1.6W
KF0210F5Lxyz	5Vdc, 0.5W	KF0210F1Lxyz	12Vdc, 0.7W
KF0210F5Mxyz	5Vdc, 0.8W	KF0210F1Mxyz	12Vdc, 0.8W
KF0210F5Hxyz	5Vdc, 1.0W	KF0210F1Hxyz	12Vdc, 1.6W
KF0310S5Lxyz	5Vdc, 0.6W	KF0310S1Lxyz	12Vdc, 0.7W
KF0310S5Mxyz	5Vdc, 1.0W	KF0310S1Mxyz	12Vdc, 1.3W
KF0310S5Hxyz	5Vdc, 1.1W	KF0310S1Hxyz	12Vdc, 1.5W
KF0310B5Lxyz	5Vdc, 0.5W	KF0310B1Lxyz	12Vdc, 0.7W
KF0310B5Mxyz	5Vdc, 0.9W	KF0310B1Mxyz	12Vdc, 1.3W
KF0310B5Hxyz	5Vdc, 1.0W	KF0310B1Hxyz	12Vdc, 1.4W
KF0310C5Lxyz	5Vdc, 0.5W	KF0310C1Lxyz	12Vdc, 0.7W
KF0310C5Mxyz	5Vdc, 0.9W	KF0310C1Mxyz	12Vdc, 1.3W
KF0310C5Hxyz	5Vdc, 1.0W	KF0310C1Hxyz	12Vdc, 1.4W
KF0310H5Lxyz	5Vdc, 0.5W	KF0310H1Lxyz	12Vdc, 0.7W
KF0310H5Mxyz	5Vdc, 0.9W	KF0310H1Mxyz	12Vdc, 1.3W
KF0310H5Hxyz	5Vdc, 1.0W	KF0310H1Hxyz	12Vdc, 1.4W
KF0310F5Lxyz	5Vdc, 0.5W	KF0310F1Lxyz	12Vdc, 0.7W
KF0310F5Mxyz	5Vdc, 0.9W	KF0310F1Mxyz	12Vdc, 1.3W
KF0310F5Hxyz	5Vdc, 1.0W	KF0310F1Hxyz	12Vdc, 1.4W
KF0B10b5Exyz	5Vdc, 0.4W	KF0B10b1Exyz	12Vdc, 0.6W
KF0B10b5Lxyz	5Vdc, 0.5W	KF0B10b1Lxyz	12Vdc, 0.8W
KF0B10b5Mxyz	5Vdc, 0.8W	KF0B10b1Mxyz	12Vdc, 1.0W
KF0B10b5Hxyz	5Vdc, 1.1W	KF0B10b1Hxyz	12Vdc, 1.2W
KF0B10b5Sxyz	5Vdc, 1.2W	KF0B10b1Sxyz	12Vdc, 1.7W
KF0410S5Lxyz	5Vdc, 0.6W	KF0410S1Lxyz	12Vdc, 0.7W
KF0410S5Mxyz	5Vdc, 0.8W	KF0410S1Mxyz	12Vdc, 0.8W
KF0410S5Hxyz	5Vdc, 1.2W	KF0410S1Hxyz	12Vdc, 1.2W
KF0410C5Lxyz	5Vdc, 0.4W	KF0410C1Lxyz	12Vdc, 0.6W
KF0410C5Mxyz	5Vdc, 0.6W	KF0410C1Mxyz	12Vdc, 0.7W
KF0410C5Hxyz	5Vdc, 0.9W	KF0410C1Hxyz	12Vdc, 1.1W
KF0410B5Lxyz	5Vdc, 0.4W	KF0410B1Lxyz	12Vdc, 0.6W
KF0410B5Mxyz	5Vdc, 0.5W	KF0410B1Mxyz	12Vdc, 0.7W
KF0410B5Hxyz	5Vdc, 0.8W	KF0410B1Hxyz	12Vdc, 0.8W
KF0410H5Lxyz	5Vdc, 0.4W	KF0410H1Lxyz	12Vdc, 0.6W
KF0410H5Mxyz	5Vdc, 0.5W	KF0410H1Mxyz	12Vdc, 0.7W
KF0410H5Hxyz	5Vdc, 0.8W	KF0410H1Hxyz	12Vdc, 0.8W
KF0410F5Lxyz	5Vdc, 0.4W	KF0410F1Lxyz	12Vdc, 0.6W
KF0410F5Mxyz	5Vdc, 0.5W	KF0410F1Mxyz	12Vdc, 0.7W
KF0410F5Hxyz	5Vdc, 0.8W	KF0410F1Hxyz	12Vdc, 0.8W
KF0410b2Lxyz	24Vdc, 0.8W		
KF0410b2Mxyz	24Vdc, 1.0W		
KF0410b2Hxyz	24Vdc, 1.2W		
KF0410b2Sxyz	24Vdc, 1.4W		

Difference

KF	02	10	b	p	r	xyz
A	B	C	D	E	F	G

A – Series Number
"KF" : series name

B – Frame dimension
"02" : 25 x 25 mm
"03" : 30 x 30 mm
"0B" : 35 x 35 mm
"04" : 40 x 40 mm

C – Frame thickness
"10" : 10 mm

D – Bearing type
b can be S, B, C, H or F
"S" : Sleeve bearing
"B" : Dual Ball bearing
"C" : Ball + Sleeve bearing
"H" : High temperature and life sleeve bearing
"F" : Free Wheel Bearing

E – Input voltage
P can be 5, 1 or 2
"5" : 5 Vdc
"1" : 12 Vdc
"2" : 24 Vdc

F – Fan speed
r can be S, H, M, L or E
"S" : Super High speed
"H" : High speed
"M" : Middle speed
"L" : Low speed
"E" : Extra Low speed

G – Marketing Code
xyz can be three alphanumeric code combination of blank, "-", 0-9 and A-Z

Date: 2006-06-30

TÜV ASIA LTD. TÜV SOD TAIWAN

Testing Laboratory

Bill Lin

Bill Lin

CE

SPORTON LAB.

Certificate No: EC2D2008-01

CERTIFICATE

- **EQUIPMENT: DC FAN**
  MODEL NO. : JFX1X2X3X4X5X6X7X8, KFX1X2X3X4X5X6X7X8
  APPLICANT : Kaimei Electronic Corp.
  13th Fl., No. 81, Sec. 1, Hsin Tai Wu Road, Hsichih,
  Taipei, Taiwan, R.O.C.

SPORTON LAB.

I HEREBY **CERTIFY THAT:**

THE MEASUREMENTS SHOWN IN THIS TEST REPORT WERE MADE IN ACCORDANCE WITH THE PROCEDURES GIVEN IN **EUROPEAN COUNCIL DIRECTIVE 89/336/EEC.** THE EQUIPMENT WAS **PASSED** THE TEST PERFORMED ACCORDING TO **EUROPEAN STANDARD EN 55022:1998/A1:2000/A2:2003 Class B, EN 61000-3-2:2000/A1:2001, EN 61000-3-3:1995/A1:2001 and EN 55024:1998/A1:2001/A2:2003 (IEC 61000-4-2:1995/A2:2000, IEC 61000-4-3:2002, IEC 61000-4-4:1995/A2:2001, IEC 61000-4-5:1995/A1:2000, IEC 61000-4-6:1996/A1:2000, IEC 61000-4-8:1993/A1:2000, IEC 61000-4-11:1994/A1:2000).** THE TEST WAS CARRIED OUT ON **Jan. 11, 2007** AT **SPORTON INTERNATIONAL INC.** LAB.

Castries Huang

Castries Huang
Supervisor

SPORTON INTERNATIONAL INC. 6F, No.106, Sec.1, Hsin Tai Wu Rd., Hsi Chih, Taipei Hsien , Taiwan, R.O.C.

ACCORDING TO **EUROPEAN STANDARD**
EN 55022:1998/A1:2000/A2:2003 Class B,
EN 61000-3-2:2000/A1:2001, EN 61000-3-3:1995/A1:2001 and
EN 55024:1998/A1:2001/A2:2003 (IEC 61000-4-2:1995/A2:2000,
IEC 61000-4-3:2002, IEC 61000-4-4:1995/A2:2001,
IEC 61000-4-5:1995/A1:2000, IEC 61000-4-6:1996/A1:2000,
IEC 61000-4-8:1993/A1:2000, IEC 61000-4-11:1994/A1:2000).

More detail information of Model NO.:

X1 means for Width x Width = 02, 03, 04, 05, 06, 07, 08, 09, 0A, 0B, 0C, 12, 15
Where 02=25x25, 03=30x30, 04=40x40, 05=50x50, 06=60x60, 07=70x70, 08=80x80, 09=92x92, 0A=20x20, 0B=35x35, 0C=45X45, 12=120x120, 17=ϕ 172 or 172x150 mm

X2 means for thickness = 06, 07, 09, 10, 12, 15, 20, 25 or 25.4, 32, 38, 51
Where 06= 6, 07=7, 09=9 or 10, 10= 10, 12=12, 15=15, 20=20, 25= 25 or 25.4, 32=32, 38=38, 51=51 mm

Where the cross list for X1&X2 as the following:
0A10, 0206, 0207, 0210, 0306, 0307, 0310, 0B06, 0B07, 0B10, 0406, 0407, 0409, 0410, 0412, 0415, 0420, 0425, 0C07, 0C10, 0509, 0510, 0512, 0515, 0520, 0525, 0610, 0615, 0620, 0625, 0638, 0710, 0715, 0720, 0725, 0815, 0820, 0825, 0832, 0838, 0925, 0932, 0938, 1225, 1232, 1238, 1738, 1751

X3 means for bearing type = S, B, H, C
Where S=Sleeve, B= 2 Ball, C= 1Ball or 1Ball+Sleeve

X4 means for rated voltage =1 (12V), 2 (24V), 3 (32V), 4(48V), 5(5V), A(3V), B (25.5V), C(42V), D(18V), E(15V)

X5 means for rotation speed =T, U, S, H, M, L, E, V or 7, 6, 5, 4, 3, 2, 1, 0.
Where T or 7 means speed higher than U or 6 speed code,
U or 6 means speed higher than S or 5 speed code,
S or 5 means speed higher than H or 4 speed code,
H or 4 means Standard-high speed code,
M or 3 means Middle speed code,,
L or 2 means Low speed code,
E or 1 means speed lower than L speed code,
V or 0 means speed lower than E speed code.

X6, X7, X8 means the internal code to distinguish the wiring, frame and blade type or the dimension of the screw hole and or the color of the above material and also for special printing characters on the label requested by the client.

Castries Huang Jan. 18.2011

Castries Huang
Supervisor