LL4448

FAST SWITCHING SURFACE MOUNT DIODES	VOLTAGE - 100Volts POWER - 50 mW

FEATURES

- Fast Switching Speed
- Surface Mount Package Ideally Suited for Automatic Insertion
- Silicon Epitaxial Planar Construction
- Lead free in comply with EU RoHS 2002/95/EC directives

MECHANICAL DATA

- Case: MINI MELF
- Terminals:Solderable per MIL-STD-750, Method 2026
- Polarity:Cathode Band
- Marking: Cathode Band Only
- Weight:0.03 grams(approx)

MINI MELF(LL-34)

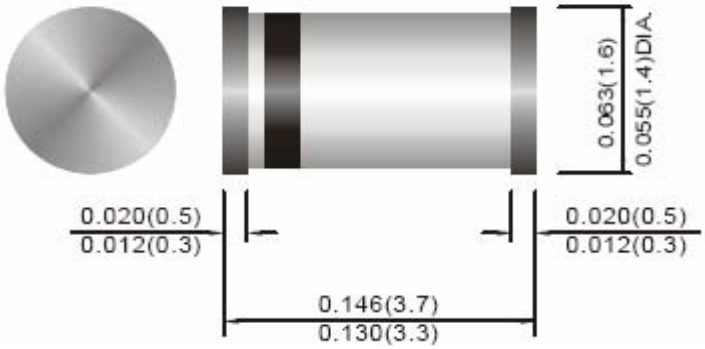

Unit :inch(mm)

MAXIMUM RATINGS AND ELECTRICAL CHARACTERISTICS(T_J=25℃ unless otherwise noted)

Parameter	Symbol	LL4448	Units
Peak Reverse Voltage	V_{RM}	100	V
Maximum DC Blocking Voltage	V_{DC}	75	V
Maximum Average Forward Current at TA=25℃ And f≥50Hz	$I_{F(AV)}$	150	mA
Surge Forward Current at t≤1s and T_J=25℃	I_{FSM}	500	mA
Power Dissipation at T_A=25℃	Ptot	500	mW
Maximum Forward Voltage at I_F=100mA	V_F	1	V
Maximum Leakage Current @V_R=20V @V_R=20V,Tj=150℃	I_R I_R	25 50	nA uA
Maximum Capacitance at V_F=V_R=0	C_J	4	pF
Maximum Reverse Recovery Time From I_F=-I_R=10mA to I_{RR}=-1mA,V_R=6V R_L=100Ω	trr	4	ns
Typical Maximum Thermal Resistance	$R_{\theta JA}$	350	℃/W
Junction Temperature	T_J	-65to+175	℃
Storage Temperature Range	T_{STG}	-65to+175	℃

NOTE:

1.CJ at V_R=0,f=1MHz

2.From I_F=10mA to I_R=1mA, V_R=6Volts, R_L=100Ω

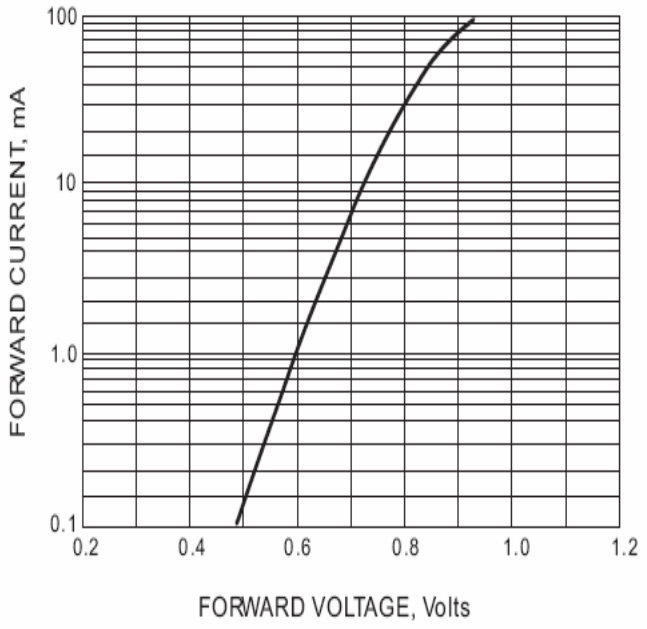

FORWARD VOLTAGE

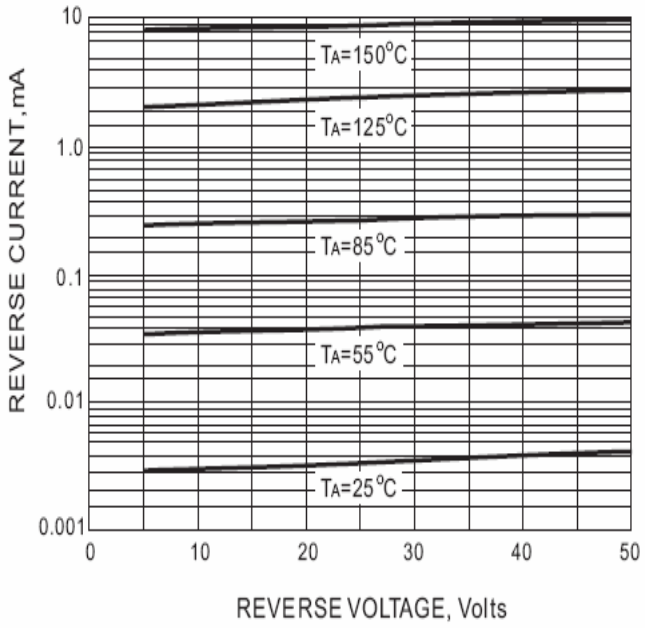

LEAKAGE CURRENT

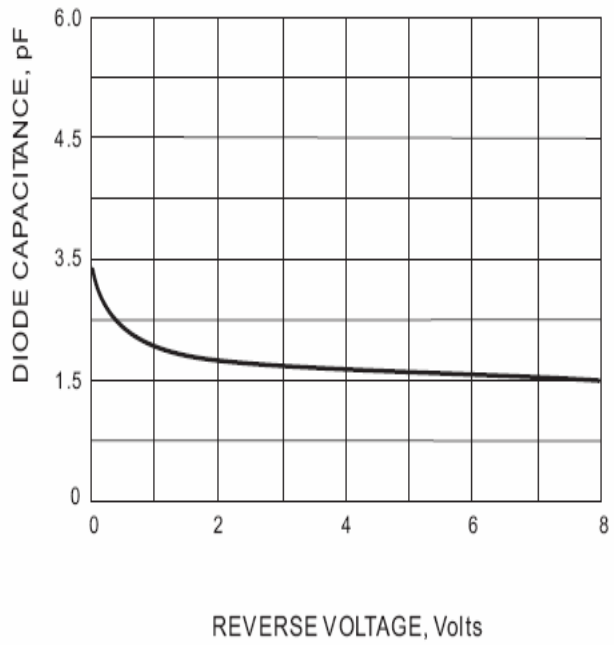

TYPICAL CAPATICANCE

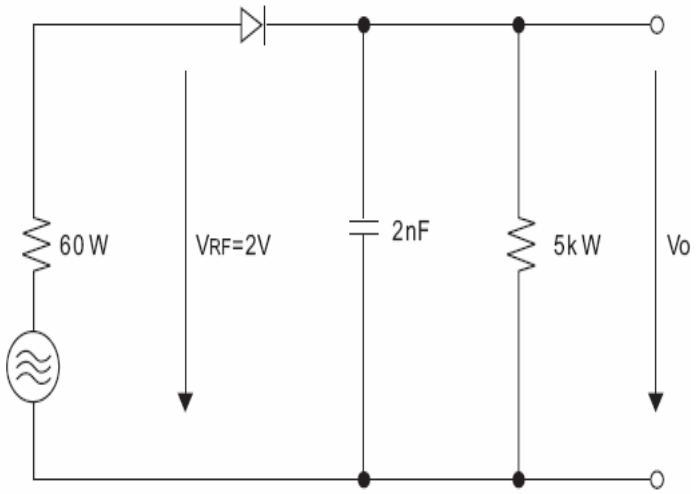

RECTIFICATION EFFCIENCY MEASUREMENT CIRCUIT