# SL1455

## WIDEBAND LINEAR FM DETECTOR WITH THRESHOLD EXTENSION

The SL1455 is a wideband FM demodulator with threshold extension. It is intended for use in satellite receivers with an IF between 300MHz and 700MHz.

### FEATURES

- 7dB Noise Threshold Obtainable
- Low External Component Count
- Negligible Differential Gain and Phase Error
- Wide Operating Frequency Range: 300 to 700MHz
- Demodulates FM Signals with up to 28MHz p-p Deviation
- Electrostatic Protection*

* Normal ESD handling precautions should be observed

### APPLICATIONS

- DBS Receivers
- Wideband Data Communications Demodulation

### ABSOLUTE MAXIMUM RATINGS

| | |
|---|---|
| Operating temperature range | −10°C to+80°C |
| Supply voltage | 7V |
| Input voltage | 2·5V p-p |
| Storage temperature | −55°C to +150°C |
| Junction temperature | +175°C |

### ORDERING INFORMATION

**SL1455 NA DP** (14-lead plastic DIL package)
**SL1455 NA MP** (14-lead miniature plastic DIL package)

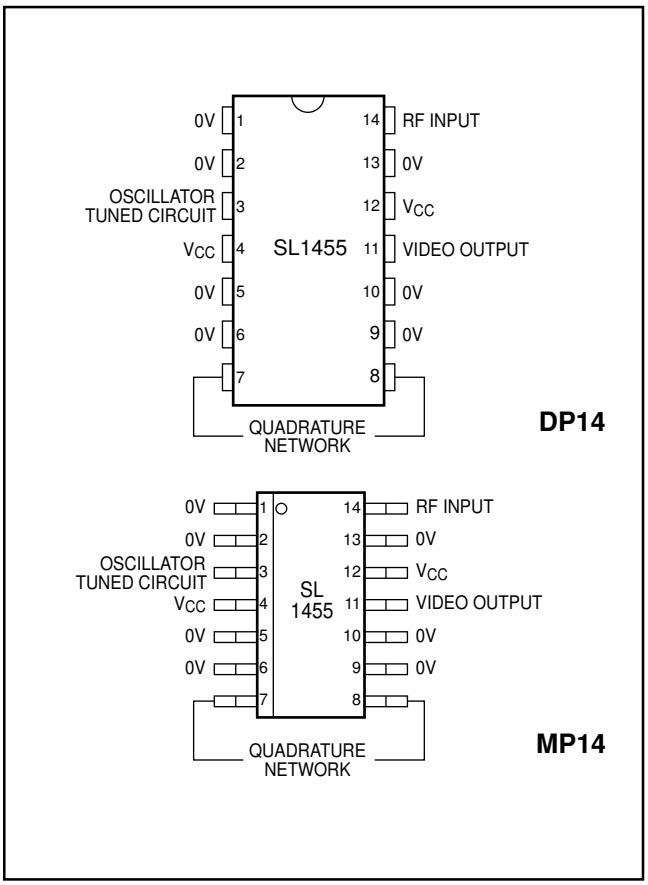


*Fig. 1 Pin connections - top view (not to scale)*

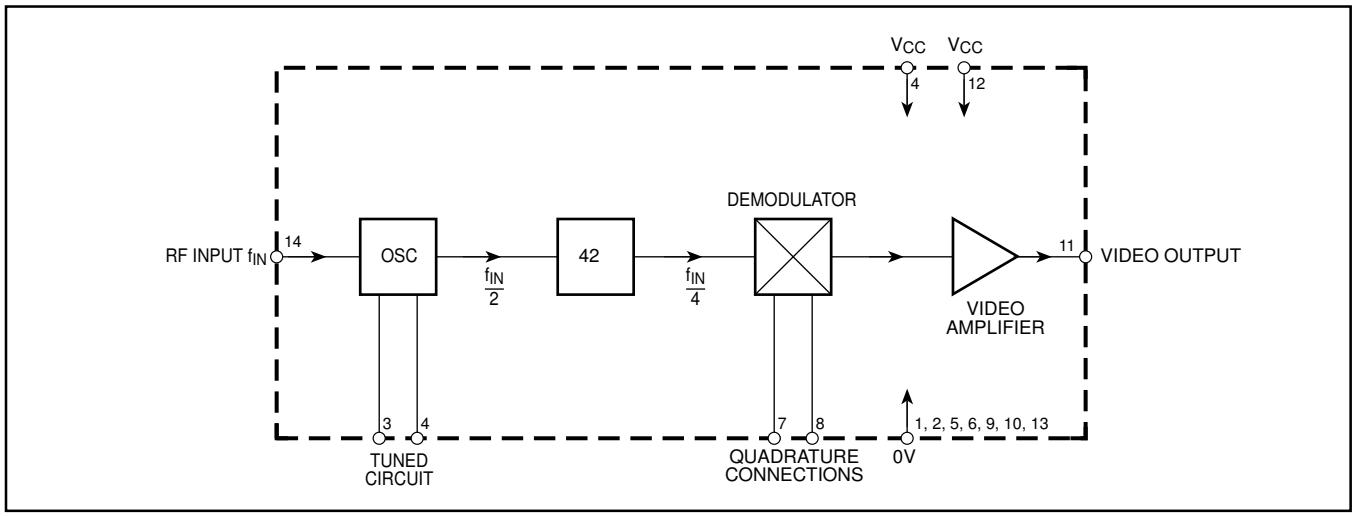


*Fig. 2 Block diagram*

## ELECTRICAL CHARACTERISTICS

**These characteristics are guaranteed over the following conditions (unless otherwise stated):**

$T_{AMB}$ = +25°C, $V_{CC}$ = +4·5V to +5·5V.

| Characteristic | Pin | Value | | | Units | Conditions |
|---|---|---|---|---|---|---|
| | | Min. | Typ. | Max. | | |
| Supply voltage | 12,4 | 4·5 | 5·0 | 5·5 | V | $V_{CC}$ = 5V |
| Supply current | 12,4 | 25 | 30 | 35 | mA | |
| Differential gain | | | <±1 | | % | Δf = 21·4MHz p-p. Demodulated staircase referred to input staircase before modulation. |
| Differential phase | | | <±1 | | Deg | Demodulated colour bar waveform referred to waveform before modulation. |
| IF range | | 300 | 610 | 700 | MHz | |
| Input level | 14 | | 22 | 400 | mVrms | |
| Noise threshold | | | 7 | | dB | See note 1 |
| Output level | 11 | | 1·3 | | V p-p | Δf = 21·4MHz p-p |
| Intermodulation products | 11 | | −60 | | dB | See note 2 |
| Video bandwidth | | | 10 | | MHz | |

NOTES
1. All characteristics from Noise Threshold to Video Bandwidth are measured using the application circuit Fig. 3.
2. Signal 1: 4·433MHz, deviation = 21·4MHz p-p.
   Signal 2: 6MHz, deviation = 3MHz p-p (PAL and sound subcarriers).

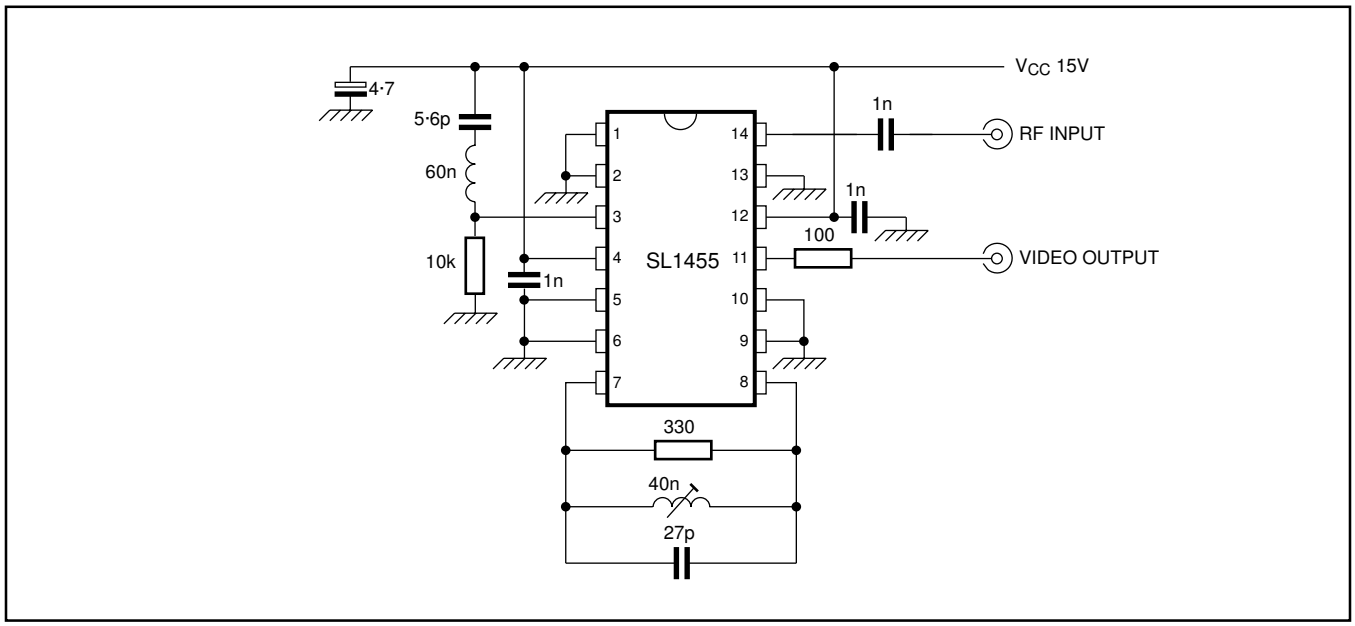


*Fig. 3 Typical application: 612MHz threshold extended demodulator*

NOTES

## PACKAGE DETAILS

Dimensions are shown thus: mm (in)

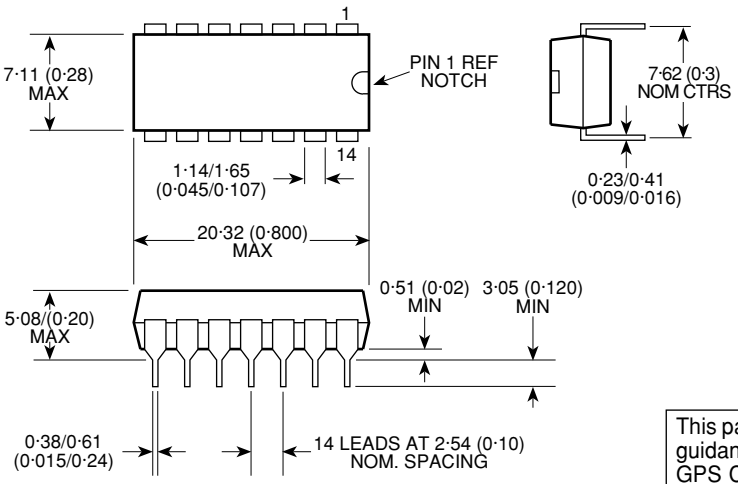


This package outline diagram is for guidance only. Please contact your GPS Customer Service Centre for further information.

**14-LEAD PLASTIC DIL – DP14**

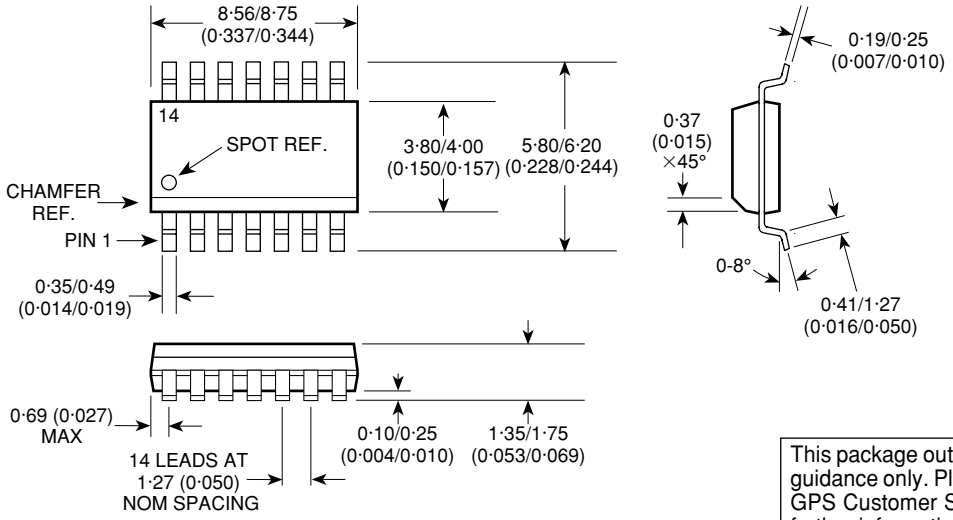


This package outline diagram is for guidance only. Please contact your GPS Customer Service Centre for further information.

**14-LEAD MINIATURE PLASTIC DIL - MP14**

GEC PLESSEY
SEMICONDUCTORS

HEADQUARTERS OPERATIONS
**GEC PLESSEY SEMICONDUCTORS**
Cheney Manor, Swindon,
Wiltshire SN2 2QW, United Kingdom.
Tel: (01793) 518000
Fax: (01793) 518411

**GEC PLESSEY SEMICONDUCTORS**
P.O. Box 660017
1500 Green Hills Road,
Scotts Valley, California 95067-0017,
United States of America.
Tel: (408) 438 2900
Fax: (408) 438 5576

CUSTOMER SERVICE CENTRES
- **FRANCE & BENELUX** Les Ulis Cedex Tel: (1) 69 18 90 00 Fax : (1) 64 46 06 07
- **GERMANY** Munich Tel: (089) 3609 06-0 Fax : (089) 3609 06-55
- **ITALY** Milan Tel: (02) 6607151 Fax: (02) 66040993
- **JAPAN** Tokyo Tel: (03) 5276-5501 Fax: (03) 5276-5510
- **KOREA** Seoul Tel: (2) 5668141 Fax: (2) 5697933
- **NORTH AMERICA** Scotts Valley, USA Tel (408) 438 2900 Fax: (408) 438 7023.
- **SOUTH EAST ASIA** Singapore Tel: 3827708 Fax: 3828872
- **SWEDEN** Stockholm Tel: (8) 702 97 70 Fax: (8) 640 47 36
- **TAIWAN, ROC** Taipei Tel: (2) 5461260. Fax: (2) 7190260
- **UK, EIRE, DENMARK, FINLAND & NORWAY**
  Swindon Tel: (01793) 726666 Fax : (01793) 518582

These are supported by Agents and Distributors in major countries world-wide.

© GEC Plessey Semiconductors 1996 Publication No. 2036 Issue No. 2.2 July 1996
TECHNICAL DOCUMENTATION - NOT FOR RESALE. PRINTED IN UNITED KINGDOM.

This publication is issued to provide information only which (unless agreed by the Company in writing) may not be used, applied or reproduced for any purpose nor form part of any order or contract nor to be regarded as a representation relating to the products or services concerned. No warranty or guarantee express or implied is made regarding the capability, performance or suitability of any product or service. The Company reserves the right to alter without prior notice the specification, design or price of any product or service. Information concerning possible methods of use is provided as a guide only and does not constitute any guarantee that such methods of use will be satisfactory in a specific piece of equipment. It is the user's responsibility to fully determine the performance and suitability of any equipment using such information and to ensure that any publication or data used is up to date and has not been superseded. These products are not suitable for use in any medical products whose failure to perform may result in significant injury or death to the user. All products and materials are sold and services provided subject to the Company's conditions of sale, which are available on request.