COOLTRON

PRODUCT SPECIFICATION SHEET

CUSTOMER:	
CUSTOMER MODEL NO.:	
COOLTRON MODEL NO.:	FA1238B22T7-92
DESCRIPTION:	AC Fan, 120X120X38mm, 230VAC, 50/60Hz, 2600/3000RPM, Two Ball Bearing, Terminal Lead, Impedance Protected
EDITION:	A01
ISSUE DATE:	7/24/2019

Products will meet the specifications stated on this data sheet for all future production orders unless a revision has been approved by both parties.

COOLTRON Industrial Supply, Inc.

19929 Harrison Ave., Industry, CA 91789 Tel: 909-598-6033 Fax: 909-598-6043 www.cooltron.com

Standards and Specifications
of
Model: FA1238B22T7-92
(Impedance Protected)

RoHS Compliance

A. General Specification

Item		Specification / Standard / Condition		
01	Outline Dimension	120X120X38 mm		
02	Bearing	Dual Ball Bearing		
03	Rated Voltage	AC 230 V (50/60Hz)		
04	Operating Voltage	AC 220 ~ 240 V (50/60Hz)		
05	Rated Current	0.13/0.09	A	1. Rated Voltage 2. 25°C, 65% RH
06	Power Consumption	21/15	W	
07	Rated Speed	2,600/3,000	R.P.M. ± 10%	1. Free Air 2. Rated Voltage 3. 25°C, 65% RH 4. After 10 Min. Rotating.
08	Maximum Airflow	85.3/101.5	CFM	1. Rated Voltage 2. AMCA Standard 3. Rated Speed
09	Maximum Static Pressure	7.2/8.7	mm-H_2O	
10	Noise Level	44.3/40.4	dB (A)	1. Rated Voltage 2. Measured in a Non-Echo Chamber 3. ISO 3745 Test Condition
11	Life Expectancy	70,000	hrs at 40°C	1. L10 at Conf. Level 90%, 2. Rated Voltage
12	Net Weight	520	Gram	
13	Number of Blade	5	Blades	
14	Rotating Direction	Clockwise		Looking at Rotor Side
15	Plastic Material: Housing, Blade	1. Housing: Die-Cast Aluminum, Painted Black 2. Blade: Injection Molded of Flame Retardant Polycarbonate, Black		
16	Lead Wire	Terminal Lead		
17	Special Function	Without		

B. Electrical Specification

Item		Specification / Condition
01	Motor Protection	Impedance Protected
02	Polarity Protection	Reverse connection at the rated voltage will not cause any damage
03	Insulation Resistance	100 MΩ / between unshielded wire and frame at 500 VDC/min.
04	Dielectric Strength	Between terminal and housing 1500 VAC for 1 minute.

C. Environmental Specification

Item		Specification / Condition
01	Operating Condition	Temperature: -10°C ~ + 70°C Humidity: 35% ~ 85% RH
02	Storage Temperature	Temperature: -40°C ~ + 85°C Humidity: 35% ~ 85% RH
03	Packing Vibration Test	Packing condition: X, Y, Z 3 directions, 1.1G load vibration test for 30 min.
04	Packing Shock Proof Test	1 corner, 3 edges, 6 faces natural drop from 60cm high, packed

D. Safety Approvals

Safety Approval	File No.
CE	TB10088274
UL	E194726
CUL	E194726

E. Label Marking

01: Fan Label Marking

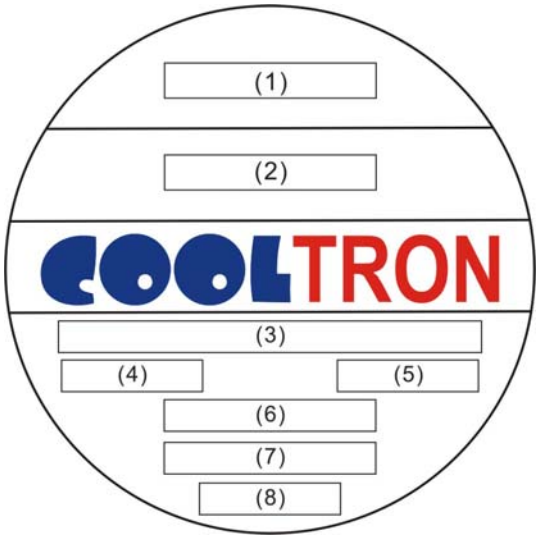

(1)	Safety Approval
(2)	Part Number
(3)	Model
(4)	Rated Voltage
(5)	Current / Power
(6)	Bearing Type
(7)	Motor Protection
(8)	Location

02: RoHS Label Marking:

Label	Location
RoHS & Date Code	Fan Outlet Frame

F. Air Flow Performance Curve

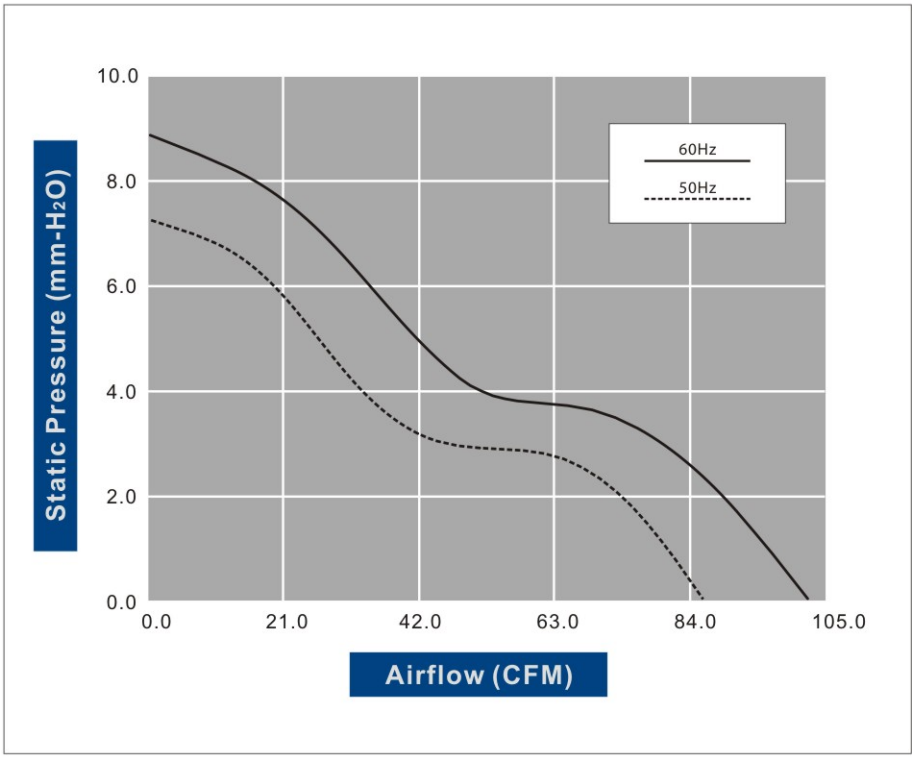

G. Model Drawing

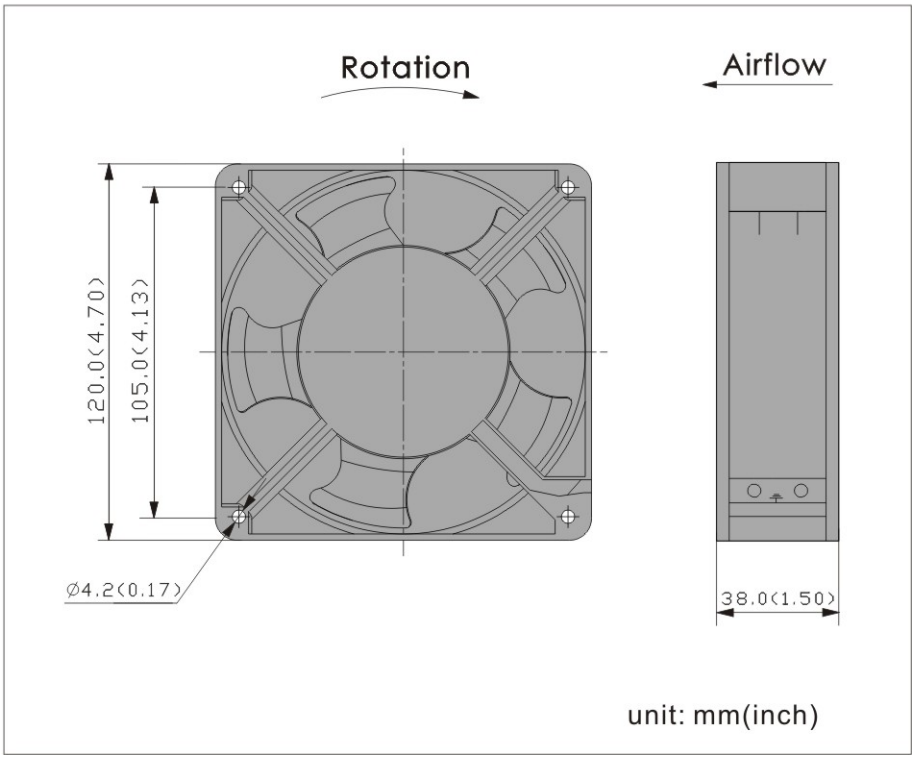

H. Fan Photos

REMARKS

1. COOLTRON will not assume responsibility for the performance of the products if the application conditions fall outside the parameters stated forth in this specification.
2. A written request should be submitted to COOLTRON prior to approval if abnormality and deviation from this specification is required.
3. Please be cautious when fan is being exercised or handled. Damages may be resulted when apply pressure to the impeller or hold the fan by the lead wires or drop the fans to the production platform.
4. With exception of suitability of some particular designs, any failure and problems regarding safety of the product caused by the introduction of powder, droplets of water or encroachment of insert in the hub are not guaranteed.
5. All general specifications and quality values are measured under condition of free air and fan vertical set up. COOLTRON highly suggests practicing a test when fan apply to a special application.
6. COOLTRON fans are not suitable to be used in an environment that contains aggressive or corrosive fluids.
7. Always ensure that fans are stored according to the storage temperatures specified. Do not store in an environment with a high humidity level. If the fans were stored for longer than 6 months, it is highly recommended to apply functional testing before shipping.
8. Except for the feature of the Lock Rotor Protection specifically stated, this feature is not applied to all fans. COOLTRON highly suggests not to stop the impellers of the working fans such interruption will cause adverse effect.
9. During installation, please be cautious. COOLTRON is not responsible for any excess resonance, vibration and subsequent noise caused by incorrect mounting of fans.
10. During testing it is important to consider safety at all times. A suitable guard should be fitted to the fan to prevent personal injury.
11. All test environments are conducted under the condition of relative (ambient) temperature and humidity at 25℃, 65%RH. The test result stated above is effective only for unique fan performance.
12. The above conditions are examples of extreme application. However they are very important and should receive top priority.