承　　认　　书
APPROVAL　SHEET

编 号 No.	
日期 Date	

客　　户 Customer	

品　　名 Product	**Disc Type Varistor for Surge Protection**
系　　列 Series	**20D Series**

料号 Part No.		规格描述 Specification	备注 Remark
贝特电子 Betterfuse			
客　　户 Customer			

环保特别提示 Special instructions for environmental protection
本产品：

供应商-贝特电子 Supplier-Betterfuse		零件承认章 Approval Signet	客　　户 Customer	零件承认章 Approval Signet
制 作 Make	Wenshan Chen	东莞市贝特电子科技股份有限公司		
审 核 Check	Fei Gao			
确 认 Approval	Weirong Xiang			

联络 Contact			
业务 Sales	电话 Telephone	手机 Cellphone	邮箱 E-mail
零件承认后敬请回签一份给我司留存，或将承认后的封面传真（0769-8352 1857）至我司，谢谢！			

Document Record

No.	Date	Modified Content	Page	Edition	Prepared/modified by	Checked by
1	2016.7.22	Initial		A/0	Jeffery	Wenqiang Luo
2	2019.03.12	Update product parameters		A/1	Xiang Xiong	Jun Li
3	2019.09.03	Add to the content	9	A/2	YaLan Wang	Fei Gao
4	2020.01.03	Update content		A/3	YaLan Wang	Fei Gao
5	2020.04.03	Update content		A/4	YaLan Wang	Fei Gao
6	2021.10.14	Update Size of F	5	A/4	Wenshan Chen	Fei Gao
7						
8						
9						
10						
11						
12						

TABLE OF CONTENTS

1. SCOPE AND DESCRIPTION 3

2. GENERAL INFORMATION 3

3. AGENCY APPROVALS 3

4. PART NUMBERING SYSTEM 4

5. MECHANICAL CHARACTERISTICS 5

6. ELECTRICAL SPECIFICATIONS 7

7. SOLDERING PARAMETERS 9

8. ORDERING INFORMATION 9

9. PACKING INFORMATION 10

10. APPENDIX 11

1. SCOPE AND DESCRIPTION

Following electronic product specifications apply to piezoresistor of the 20D series. The 20D series is High surge current handling capability for over-voltage protection.

Its main applications are for transistor, diode, IC, thyristor or triac semiconductor protection,surge protection in consumer electronics, in industrial electronics, in electronic home appliances, gas and petroleum appliances,relay and electromagnetic valve surge absorption.

2. GENERAL INFORMATION

2.1 Features

* Wide operating voltage (V1mA) range from 18V to 1800V.
* Fast responding to transient over-voltage.
* Large absorbing transient energy capability.
* Low clamping ratio and no follow-on current.
* Meets MSL level 1, per J-STD-020 ISO9001-2018
* Safety number : E317616 VDE-40028836 CQC-12001076476

2.2 Application

*Transistor, Diode, IC, Thyristor or Triac semiconductor protection.
* Surge protection in consumer electronics.
* Surge protection in industrial electronics.
* Surge protection in electronic home appliances, gas and petroleum appliances.
* Relay and electromagnetic valve surge absorption.

3. AGENCY APPROVALS

Agency	Agency File Number	Type.
c UL us	E317616	10D101K;101KH;102K;102KH;112K;112KH;121K;121KH;151K 10D180L;181K;181KH;201K;201KH;220K;221K;221KH;241K; 10D241KH;270K;271K;271KH;301K;301KH;330K;331KH;331K 10D361K;361KH;390K;391K;391KH;431K;431KH;470K;471K; 10D471KH;511K;511KH;560K;561KH;561K;621K;621KH;680K 10D681K;681KH;751K;751KH;781K;781KH;820K;820KH;821K 10D821KH;911K;911KH;152K;
VDE	40028836	20D270K~20D680K 20D820K~20D911K
CQC	CQC12001076476	20D431K~20D182K
CSA	70147058	20D820K;20D101K;20D121K;20D151K;20D181K; 20D201K;20D221K;20D241K;20D271K;20D301K; 20D331K;20D361K;20D391K;20D431K;20D471K; 20D511K; 20D561K;20D621K;20D681K;20D751K; 20D821K;20D911K;20D102K;20D112K;20D182K

4. PART NUMBERING SYSTEM

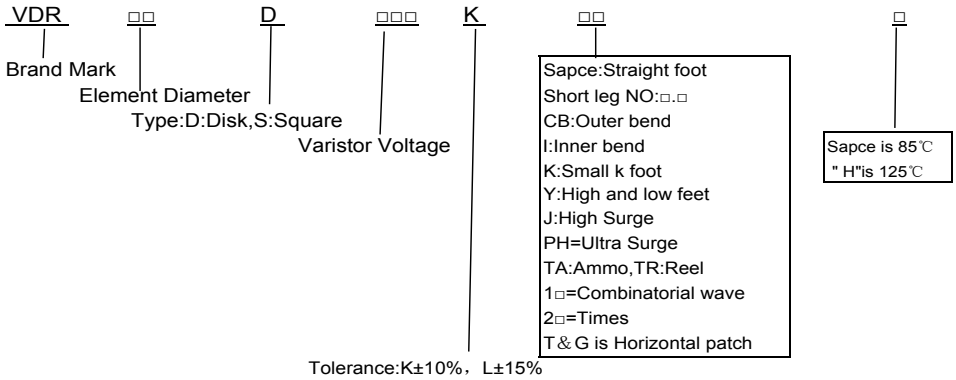

4.1.New Coding Rules For Varistors

New Coding Rules for Varistors

Sapce:is Straight foot＆85℃	空白表示标准直接及85度
"H"is 125℃	H:代表高温粉125度
Short leg:NO:□.□	K后数值表剪短角长度±0.5
U:+10/-0	K后U：表示电压值+10/-0
D:-10/+0	K后D：表示电压值-10/+0
M:+5/-5	K后M：表示电压值+5/-5
CB:Outer bend	CB:表示内弯脚
I:Inner bend	I:表示内弯脚
Y:High and low feet	Y:前后弯脚
J:High Surge	J:表示高焦耳（J2或J3依表定）
PH=Ultra Surge	PH:表示超高能
1□=Combinatorial wave	BC 2/1 DC 3/1.5 EC 4/2 SC 6/3
2□=Times	YC 10/5 C:代表40次
- G :is Horizontal patch	- G表示卧式贴片加窄带卷装
- L:Horizontal plug-in	- L表示卧式插件散装
- TA:Ammo,-TR:Reel	- TA表示盒装-TR表示卷装
- T1 T2 T3 T4 is bushing	- T1透明-T2黑色-T3蓝色带脚-T4蓝色
- TA:Ammo,-TR:Reel	- TA表盒装-TR表示卷装

5. MECHANICAL CHARACTERISTICS

Dimensions

S Type(Straight Lead)

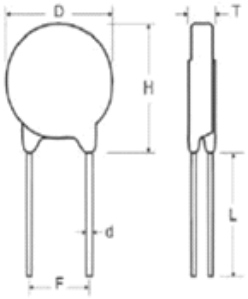

I Type(Inner Crimped Lead)

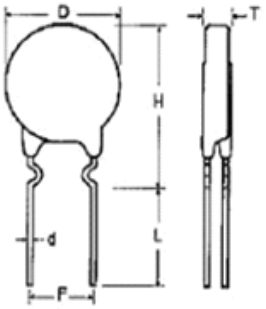

C Type(Out Crimped Lead)

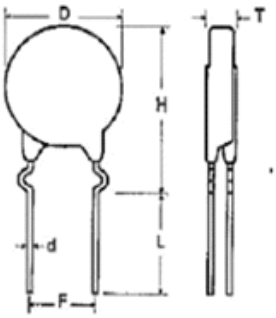

Y Lead Type(Y Kink Lead)

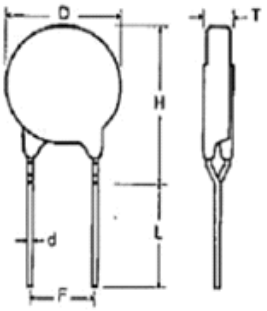

Unit: mm

Part No.	Part No.	T Max.	D Max.	H Max.		L min.	F	d ± 0.05
				S	I / C / Y			
VDR-20D180L	VDR-20D180LJ	4.5	23.0	26.5	28.0	20.0	10.0±0.8	0.8
VDR-20D220K	VDR-20D220KJ	4.6	23.0	26.5	28.0	20.0	10.0±0.8	0.8
VDR-20D270K	VDR-20D270KJ	4.7	23.0	26.5	28.0	20.0	10.0±0.8	0.8
VDR-20D330K	VDR-20D330KJ	4.9	23.0	26.5	28.0	20.0	10.0±0.8	0.8
VDR-20D390K	VDR-20D390KJ	4.8	23.0	26.5	28.0	20.0	10.0±0.8	0.8
VDR-20D470K	VDR-20D470KJ	4.9	23.0	26.5	28.0	20.0	10.0±0.8	0.8
VDR-20D560K	VDR-20D560KJ	5.0	23.0	26.5	28.0	20.0	10.0±0.8	0.8
VDR-20D680K	VDR-20D680KJ	5.2	23.0	26.5	28.0	20.0	10.0±0.8	0.8
VDR-20D820K	VDR-20D820KJ	4.1	23.0	26.5	28.0	20.0	10.0±0.8	0.8
VDR-20D101K	VDR-20D101KJ	4.3	23.0	26.5	28.0	20.0	10.0±0.8	0.8
VDR-20D121K	VDR-20D121KJ	4.4	23.0	26.5	28.0	20.0	10.0±0.8	0.8
VDR-20D151K	VDR-20D151KJ	4.2	23.0	26.5	28.0	20.0	10.0±0.8	0.8
VDR-20D181K	VDR-20D181KJ	4.3	23.0	26.5	28.0	20.0	10.0±0.8	0.8
VDR-20D201K	VDR-20D201KJ	4.4	23.0	26.5	28.0	20.0	10.0±0.8	0.8
VDR-20D221K	VDR-20D221KJ	4.5	23.0	26.5	28.0	20.0	10.0±0.8	0.8
VDR-20D241K	VDR-20D241KJ	4.6	23.0	26.5	28.0	20.0	10.0±0.8	0.8
VDR-20D271K	VDR-20D271KJ	4.7	23.0	26.5	28.0	20.0	10.0±0.8	0.8
VDR-20D301K	VDR-20D301KJ	4.8	23.0	26.5	28.0	20.0	10.0±0.8	0.8
VDR-20D331K	VDR-20D331KJ	5.0	23.0	26.5	28.0	20.0	10.0±0.8	0.8
VDR-20D361K	VDR-20D361KJ	5.2	23.0	26.5	28.0	20.0	10.0±0.8	0.8
VDR-20D391K	VDR-20D391KJ	5.2	23.0	26.5	28.0	20.0	10.0±0.8	0.8
VDR-20D431K	VDR-20D431KJ	5.4	23.0	26.5	28.0	20.0	10.0±0.8	0.8
VDR-20D471K	VDR-20D471KJ	5.9	23.0	26.5	28.0	20.0	10.0±0.8	0.8
VDR-20D511K	VDR-20D511KJ	6.1	23.0	26.5	28.0	20.0	10.0±0.8	0.8
VDR-20D561K	VDR-20D561KJ	6.4	23.0	26.5	28.0	20.0	10.0±0.8	0.8
VDR-20D621K	VDR-20D621KJ	6.8	23.0	26.5	28.0	20.0	10.0±0.8	0.8
VDR-20D681K	VDR-20D681KJ	7.1	23.0	26.5	28.0	20.0	10.0±0.8	0.8
VDR-20D751K	VDR-20D751KJ	7.2	23.0	26.5	28.0	20.0	10.0±0.8	0.8
VDR-20D781K	VDR-20D781KJ	7.3	23.0	26.5	28.0	20.0	10.0±0.8	0.8
VDR-20D821K	VDR-20D821KJ	7.5	23.0	26.5	28.0	20.0	10.0±0.8	0.8
VDR-20D911K	VDR-20D911KJ	7.6	23.0	26.5	28.0	20.0	10.0±0.8	0.8
VDR-20D102K	VDR-20D102KJ	8.0	23.0	26.5	28.0	20.0	10.0±0.8	0.8
VDR-20D112K	VDR-20D112KJ	8.5	23.0	26.5	28.0	20.0	10.0±0.8	0.8
VDR-20D122K	VDR-20D122KJ	9.0	23.0	26.5	28.0	20.0	10.0±0.8	0.8
VDR-20D142K	VDR-20D142KJ	10.5	23.0	26.5	28.0	20.0	10.0±0.8	0.8
VDR-20D162K	VDR-20D162KJ	11.0	23.0	26.5	28.0	20.0	10.0±0.8	0.8
VDR-20D182K	VDR-20D182KJ	12.0	23.0	26.5	28.0	20.0	10.0±0.8	0.8

General Characteristics

*Operating Temperature: (-40 ℃ ~+85 ℃) & (-40 ℃ ~+125 ℃)

*Storage Temperature: (-40 °C ~ +125 °C)

*Working Surface Temperature: +115 °C

*Insulation Resistance: > 100M Ω

*Coating (Epoxy Resin): Flame-Retardant to UL 94 V-0

Material

*Coating: Epoxy Resin

*Lead Wire: The Copper Wire

*Electrode: Silver Solder

*Disk: Zinc Oxide

MARKING CODE

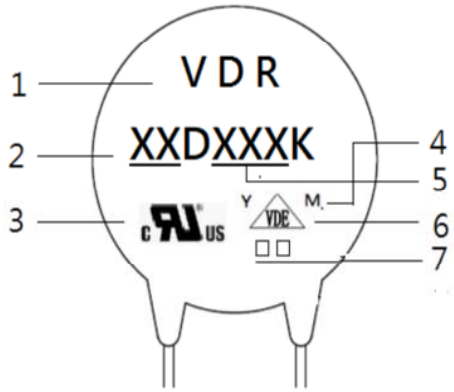

1 Varistor

2 Disk Size

3 Accreditation Logo

4 “Y” &“M” Product Line Code

5 Varistor Voltage

6 VDE Accreditation Logo

7 “J” is High Surge Code,not “J” is Standard Surge
“H” is High temperature range ,not “H” is Standard

6. ELECTRICAL SPECIFICATIONS

Electrical characteristics

Part Number		Maximum Allowable Voltage		Varistor Voltage	Maximum Clamping Voltage		Withstanding Surge Current		Energy 10/1000μS		Rated Powe	Typical Capacitance (Reference)
Standard	High Surge	AC (V)	DC (V)	V1mA(V)	IP(A)	VC(V)	I(A) Standar	I(A) High	(J) Standar	(J) High	(W)	@1KHzPF
20D180L	20D180LJ	11	14	18(15.3~20.7)	20	36	2000	3000	11	13	0.2	28500
20D220K	20D220KJ	14	18	22(19.8~24.2)	20	43	2000	3000	14	16	0.2	18500
20D270K	20D270KJ	17	22	27(24.3-29.7)	20	53	2000	3000	16	19	0.2	13000
20D330K	20D330KJ	20	26	33(29.7~36.3)	20	65	2000	3000	23	24	0.2	11500
20D390K	20D390KJ	25	31	39(35.1~42.9)	20	77	2000	3000	26	28	0.2	8500
20D470K	20D470KJ	30	38	47(42.3~51.7)	20	93	2000	3000	30	34	0.2	7400
20D560K	20D560KJ	35	45	56(50.4~61.6)	20	110	2000	3000	41	46	0.2	6500
20D680K	20D680KJ	40	56	68(61.2~74.8)	20	135	2000	3000	46	49	0.2	5800
20D820K	20D820KJ	50	65	82(73.8~90.2)	100	135	6500	10000	38	56	1.0	4900
20D101K	20D101KJ	60	85	100(90~110)	100	165	6500	10000	45	70	1.0	4000
20D121K	20D121KJ	75	100	120(108~132)	100	200	6500	10000	55	85	1.0	3300
20D151K	20D151KJ	95	125	150(135~165)	100	250	6500	10000	70	106	1.0	2700
20D181K	20D181KJ	115	150	180(162~198)	100	300	6500	10000	85	130	1.0	2200
20D201K	20D201KJ	130	170	200(185~225)	100	330	6500	10000	95	140	1.0	2000
20D221K	20D221KJ	140	180	220(198~242)	100	360	6500	10000	100	155	1.0	1800
20D241K	20D241KJ	150	200	240(216~264)	100	395	6500	10000	108	168	1.0	1650
20D271K	20D271KJ	175	225	270(243~297)	100	455	6500	10000	127	190	1.0	1500
20D301K	20D301KJ	190	250	300(270~330)	100	505	6500	10000	136	210	1.0	1300
20D331K	20D331KJ	210	275	330(297~363)	100	550	6500	10000	150	228	1.0	1200
20D361K	20D361KJ	230	300	360(324~396)	100	595	6500	10000	163	255	1.0	1100
20D391K	20D391KJ	250	320	390(351~429)	100	650	6500	10000	180	275	1.0	1000
20D431K	20D431KJ	275	350	430(387~473)	100	710	6500	10000	190	305	1.0	930
20D471K	20D471KJ	300	385	470(423~517)	100	775	6500	10000	220	350	1.0	850
20D511K	20D511KJ	320	415	510(459~561)	100	845	6500	10000	225	360	1.0	780
20D561K	20D561KJ	350	460	560(504~616)	100	920	6500	10000	230	380	1.0	710
20D621K	20D621KJ	385	505	620(558~682)	100	1025	6500	10000	235	390	1.0	650
20D681K	20D681KJ	420	560	680(612~748)	100	1120	6500	10000	240	400	1.0	600
20D751K	20D751KJ	460	615	750(675~825)	100	1240	6500	10000	255	420	1.0	530
20D781K	20D781KJ	485	640	780(702~858)	100	1290	6500	10000	265	440	1.0	510
20D821K	20D821KJ	510	670	820(738~902)	100	1355	6500	10000	282	460	1.0	500
20D911K	20D911KJ	550	745	910(819~1001)	100	1500	6500	10000	310	510	1.0	440
20D102K	20D102KJ	625	825	1000(900~1100)	100	1650	6500	10000	342	565	1.0	400
20D112K	20D112KJ	680	895	1100(990~1210)	100	1815	6500	10000	383	620	1.0	360
20D122K	20D122KJ	750	990	1200(1080~1320)	100	1980	6500	10000	408	660	1.0	350
20D142K	20D142KJ	880	1140	1400(1260~1540)	100	2310	6500	10000	532	784	1.0	340
20D162K	20D162KJ	1000	1280	1600(1400~1760)	100	2640	6500	10000	606	896	1.0	330
20D182K	20D182KJ	1100	1465	1800(1620~1980)	100	2970	6500	10000	625	990	1.0	320

20D180L & 20D220K does not have VDE certification

Reliability Test

Mechanical Ratings

Test Parameter	Test Condition / Description			Performance Requirements
Terminal Pull Strength	After gradually applying the load specified below and keeping the unit fixed for ten seconds, the terminal shall be visually examined for any damage.	Diameter	Loading	No visible damage
		0.6mm	1.0 Kg	
		0.8mm	1.0 Kg	
		1.0mm	2.0 Kg	
Terminal Bending Strength	The unit shall be secured with its terminal kept vertical and the weight specified below be applied in the axial direction. The terminal shall gradually be bent by 90° in one direction, then 90° in the opposite direction, and again back to the original position. The damage of the terminal shall be visually examined.	Diameter	Loading	No visible damage
		0.6mm	0.5 Kg	
		0.8mm	0.5 Kg	
		1.0mm	1.0 Kg	
Vibration	The Specimen shall be vibrated by its lead wires with a total amplitude of 1.5 ㎜ and a varying frequency of 10~55~10HZ(each minutes) for a period of 2 hours respectively in each X,Yand Z directions.			No visible damage △VB/VB%≦±5%
Soldering-solderability	After dipping the terminal to depth of approximately 3 ㎜ from the specimen in a soldering bath of 260℃ for 10±1(D5: 5±1) seconds. Thereafter the terminal shall be visually examined.			Terminations shall be uniformly tinned
Soldering- Resistance to Solder Heat	After preheating the specimen, the specimen shall be completely immersed into a soldering bath having a temperature of 260±5℃ for 10±1 (D5: 5±1) seconds or iron of 400±5℃ for 3±0.5 seconds. There after the change of Vb and mechanical damage shall be examined.			No visible damage △VB/VB%≦±5%

ENVIRONMENTAL RATINGS

Dry Heat Loading	The specimen shall be applied continuously the maximum allowable voltage at the specified conditions for specified period and then stored at room temperature and normal humidity over 2 hours. Thereafter, the change of Vb and mechanical damage shall be examined. Ambient temp：125±2℃ ; Period：1000±24hours.				△VB/VB%≦±10%
High Temperature Storage	In a drying oven without load. Ambient temp：125±2℃ ; period：1000±24hours				△VB/VB%≦±5%
Damp Heat Loading	The specimen shall be applied continuously the maximum allowable voltage at the specified conditions for specified period and then stored at room temperature and normal humidity over 2 hours. Thereafter, the change of Vb and mechanical damage shall be examined. Ambient condition：40±2℃ , 90 to 95%R.H. ; period：1000±24 hours				△VB/VB%≦±10%
Temperature Cycle	Condition the specimen to each temperature form step 1 to step 4 in this order for the period shown in the table of specifications. The change of Vb and mechanical damage shall be examined after 2 hours.	Step	Temp°C	Period	No visible damage △VB/VB%≦±10%
		1	-40±3°C	30 min.	
		2	Room Temp	15 min.	
		3	85±2°C	30 min.	
		4	Room Temp	15 min.	
Surge Lifetime Rating	The change of Vb shall be measured after the impulse listed below is applied 10,000 times continuously with the interval of ten seconds at room temperature.				No visible damage △VB/VB%≦±10%
Voltage Proof	Voltage：2500VAC Leakage Current≦0.5mA Time：60 Seconds				No Breakdown

7. SOLDERING PARAMETERS

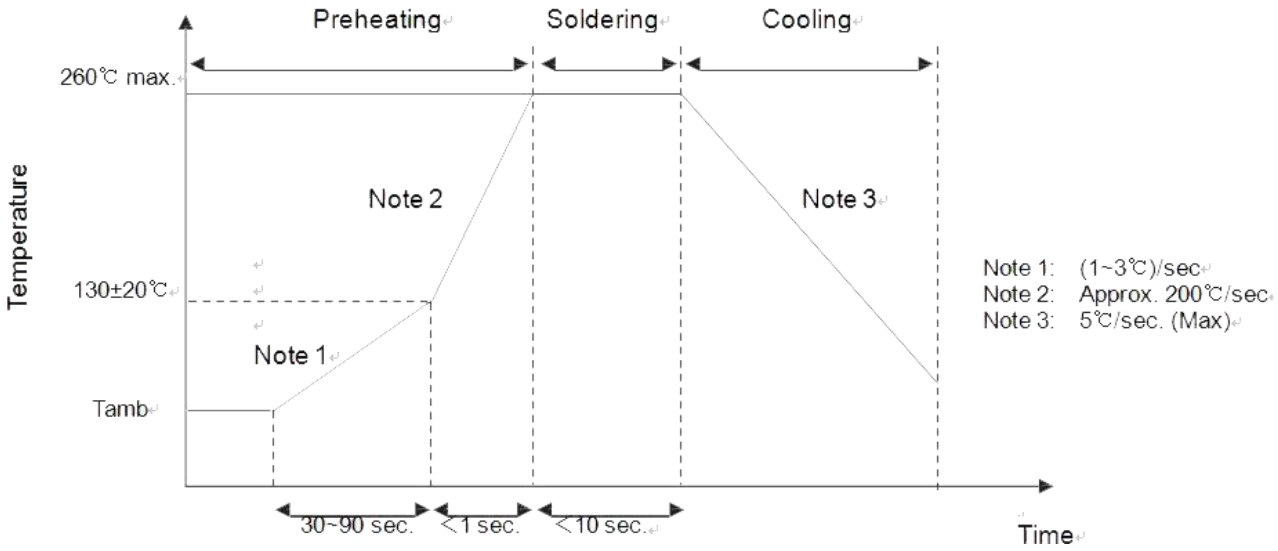

260℃ < 10s(Wave Soldering)

Soldering Peak: 260℃ -10sec Max.(IEC 60068-20)

8. ORDERING INFORMATION

The following information are necessary in order to place your order with us correctly:

Series No.	Amp Code	Packaging Code	Quantity	Purchase Order No.
20D				

9. PACKING INFORMATION

Taping and Dimensions （20D）

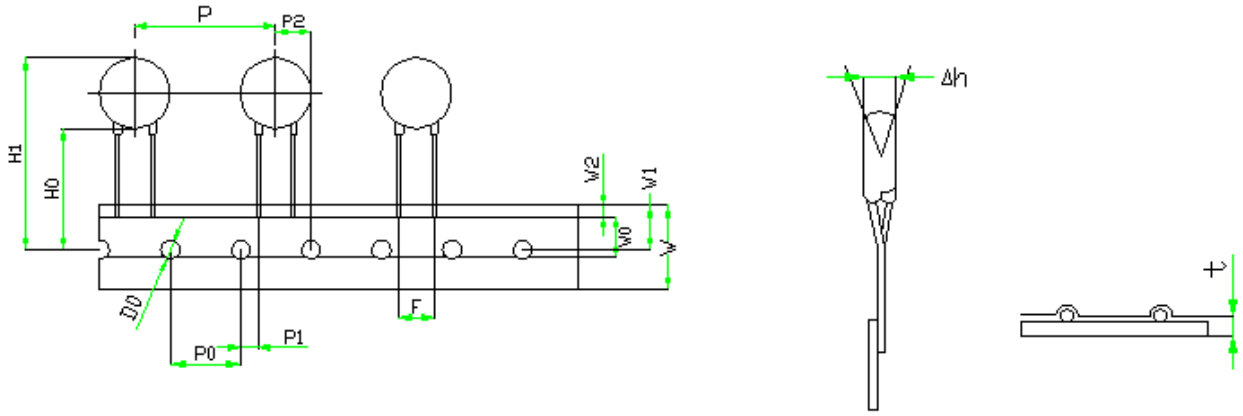

ITEM.	P	P0	P1	P2	F	Δh	W	W0	W_1	W_2	H1	H0	Do	t
Ø0.8mm 7.5mm	25.4	12.7	2.6	8.95	7.5	0	18	8	9	3	46.5	20	4	0.6
	±1.0	±0.3	±0.5	±1.3	±0.8	±0.5	±0.8	±1.0	±0.5	Max	Max	Max	±0.2	±0.3
Ø1.0mm F10.0mm	25.4	12.7	2.6	7.7	10.0	0	18	8	9	3	46.5	20	4	0.6
	±1.0	±0.3	±0.5	±1.3	±0.8	±0.5	±0.8	±1.0	±0.5	Max	Max	Max	±0.2	±0.3

(Unit:mm)

Packaging

■ Reel Packing

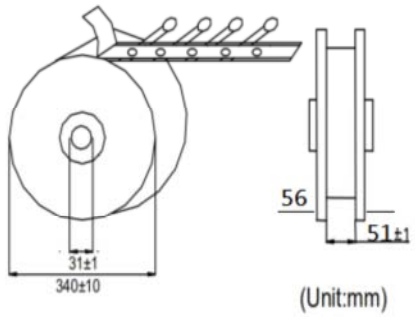

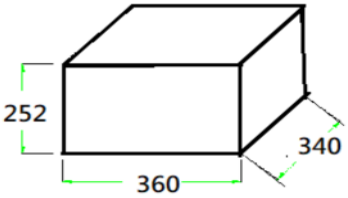

Disc Size/mm	pcs/reel
Φ 20(180～681)	300
Φ 20(751～112)	250

4 Reels/ Carton

■ Ammo Packing

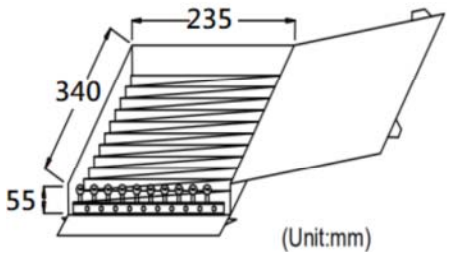

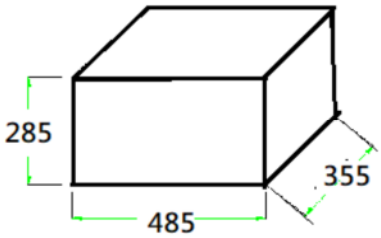

Disc Size/mm	pcs/ box
Φ 20(180～681)	300
Φ 20(751～112)	250

10 Boxs/Carton

Packaging specification / bulk packaging quantity

Unit:Pcs

Dimension	Part No.	Bag	Small Carton	Carton
20D	180L to 821K	250	1,500	3,000
20D (Short leg)	180L to 821K	250	2,000	4,000

10. APPENDIX

仪表板 / 搜索 / SURGE-PROTECTIVE DEVICES - COMPONENT | UL Product iQ

VZCA2.E317616 - SURGE-PROTECTIVE DEVICES - COMPONENT

详情
File No.: E317616
UL Category (CCN): VZ
文件类型: Listing

资源
UL Confirmation Letter
Guide Info (VZCA2)

文件 公司信息

Surge-protective Devices - Component

See General Information for Surge-protective Devices - Component

CERGLASS MFG INC
450 Zhongzhen 3Rd Rd
Yingge District
New Taipei, 239 TAIWAN

E317616

Cat No.	SPD Type	Volts (V)	AC/DC/ DC PV	PH	AMPS (A)	AMB (°C)Min	AMB (°C)Max	MODE	VPR (Vpk)	MLV (Vpk)	MCOV (V)	Vn (Vdc)	In (kA)	SCCR (kA)	NOTES
20D															
20D101K	5	60	AC	1	n/a	-40	85	Ld-Ld	-	315	60	100	2.5	n/a	1, 5a
20D101KH	5	60	AC	1	n/a	-40	125	Ld-Ld	-	315	60	100	2.5	n/a	1, 5a
20D102K	5	625	AC	1	n/a	-40	85	Ld-Ld	-	2300	625	1000	5	n/a	1, 5a
20D102KH	5	625	AC	1	n/a	-40	125	Ld-Ld	-	2300	625	1000	5	n/a	1, 5a
20D112K	5	680	AC	1	n/a	-40	85	Ld-Ld	-	2500	680	1120	5	n/a	1, 5a
20D112KH	5	680	AC	1	n/a	-40	125	Ld-Ld	-	2500	680	1120	5	n/a	1, 5a
20D121K	5	75	AC	1	n/a	-40	85	Ld-Ld	-	365	75	120	2.5	n/a	1, 5a
20D121KH	5	75	AC	1	n/a	-40	125	Ld-Ld	-	365	75	120	2.5	n/a	1, 5a
20D151K	5	95	AC	1	n/a	-40	85	Ld-Ld	-	415	95	150	2.5	n/a	1, 5a
20D151KH	5	95	AC	1	n/a	-40	125	Ld-Ld	-	415	95	150	2.5	n/a	1, 5a
20D152K	5	900	AC	1	n/a	-40	85	Ld-Ld	-	3050	900	1500	3	n/a	1, 5a
20D180L	5	10	AC	1	n/a	-40	85	Ld-Ld	-	90	11	18	1	n/a	1, 5a
20D181K	5	115	AC	1	n/a	-40	85	Ld-Ld	-	460	115	180	2.5	n/a	1, 5a
20D181KH	5	115	AC	1	n/a	-40	125	Ld-Ld	-	460	115	180	2.5	n/a	1, 5a
20D182K	5	1000	AC	1	n/a	-40	85	Ld-Ld	-	3590	1000	1800	3	n/a	1, 5a
20D201K	5	130	AC	1	n/a	-40	85	Ld-Ld	-	520	130	200	5	n/a	1, 5a
20D201KH	5	130	AC	1	n/a	-40	125	Ld-Ld	-	520	130	200	5	n/a	1, 5a
20D220K	5	14	AC	1	n/a	-40	85	Ld-Ld	-	105	14	22	1	n/a	1, 5a
20D221K	5	140	AC	1	n/a	-40	85	Ld-Ld	-	580	140	220	5	n/a	1, 5a
20D221KH	5	140	AC	1	n/a	-40	125	Ld-Ld	-	580	140	220	5	n/a	1, 5a
20D241K	5	150	AC	1	n/a	-40	85	Ld-Ld	-	640	150	257	5	n/a	1, 5a
20D241KH	5	150	AC	1	n/a	-40	125	Ld-Ld	-	640	150	257	5	n/a	1, 5a
20D270K	5	17	AC	1	n/a	-40	85	Ld-Ld	-	120	17	27	1	n/a	1, 5a
20D271K	5	175	AC	1	n/a	-40	85	Ld-Ld	-	700	175	270	5	n/a	1, 5a
20D271KH	5	175	AC	1	n/a	-40	125	Ld-Ld	-	700	175	270	5	n/a	1, 5a
20D301K	5	190	AC	1	n/a	-40	85	Ld-Ld	-	760	190	300	5	n/a	1, 5a
20D301KH	5	190	AC	1	n/a	-40	125	Ld-Ld	-	760	190	300	5	n/a	1, 5a
20D330K	5	20	AC	1	n/a	-40	85	Ld-Ld	-	135	20	33	1	n/a	1, 5a
20D331K	5	210	AC	1	n/a	-40	85	Ld-Ld	-	825	210	330	5	n/a	1, 5a
20D331KH	5	210	AC	1	n/a	-40	125	Ld-Ld	-	825	210	330	5	n/a	1, 5a
20D361K	5	230	AC	1	n/a	-40	85	Ld-Ld	-	890	230	360	5	n/a	1, 5a
20D361KH	5	230	AC	1	n/a	-40	125	Ld-Ld	-	890	230	360	5	n/a	1, 5a
20D390K	5	25	AC	1	n/a	-40	85	Ld-Ld	-	155	25	39	1	n/a	1, 5a
20D391K	5	250	AC	1	n/a	-40	85	Ld-Ld	-	955	250	390	5	n/a	1, 5a
20D391KH	5	250	AC	1	n/a	-40	125	Ld-Ld	-	955	250	390	5	n/a	1, 5a
20D431K	5	275	AC	1	n/a	-40	85	Ld-Ld	-	1020	275	430	5	n/a	1, 5a
20D431KH	5	275	AC	1	n/a	-40	125	Ld-Ld	-	1020	275	430	5	n/a	1, 5a
20D470K	5	30	AC	1	n/a	-40	85	Ld-Ld	-	175	30	47	1	n/a	1, 5a
20D471K	5	300	AC	1	n/a	-40	85	Ld-Ld	-	1100	300	480	5	n/a	1, 5a
20D471KH	5	300	AC	1	n/a	-40	125	Ld-Ld	-	1100	300	480	5	n/a	1, 5a
20D511K	5	320	AC	1	n/a	-40	85	Ld-Ld	-	1225	320	510	5	n/a	1, 5a
20D511KH	5	320	AC	1	n/a	-40	125	Ld-Ld	-	1225	320	510	5	n/a	1, 5a
20D560K	5	35	AC	1	n/a	-40	85	Ld-Ld	-	195	35	56	1	n/a	1, 5a
20D561K	5	350	AC	1	n/a	-40	85	Ld-Ld	-	1350	350	573	5	n/a	1, 5a
20D561KH	5	350	AC	1	n/a	-40	125	Ld-Ld	-	1350	350	573	5	n/a	1, 5a
20D621K	5	385	AC	1	n/a	-40	85	Ld-Ld	-	1475	385	620	5	n/a	1, 5a
20D621KH	5	385	AC	1	n/a	-40	125	Ld-Ld	-	1475	385	620	5	n/a	1, 5a
20D680K	5	40	AC	1	n/a	-40	85	Ld-Ld	-	210	40	68	1	n/a	1, 5a
20D681K	5	420	AC	1	n/a	-40	85	Ld-Ld	-	1600	420	680	5	n/a	1, 5a
20D681KH	5	420	AC	1	n/a	-40	125	Ld-Ld	-	1600	420	680	5	n/a	1, 5a
20D751K	5	460	AC	1	n/a	-40	85	Ld-Ld	-	1725	460	750	5	n/a	1, 5a
20D751KH	5	460	AC	1	n/a	-40	125	Ld-Ld	-	1725	460	750	5	n/a	1, 5a
20D781K	5	485	AC	1	n/a	-40	85	Ld-Ld	-	1850	485	780	5	n/a	1, 5a
20D781KH	5	485	AC	1	n/a	-40	125	Ld-Ld	-	1850	485	780	5	n/a	1, 5a
20D820K	5	50	AC	1	n/a	-40	85	Ld-Ld	-	270	50	83	2.5	n/a	1, 5a
20D820KH	5	50	AC	1	n/a	-40	125	Ld-Ld	-	270	50	83	2.5	n/a	1, 5a
20D821K	5	510	AC	1	n/a	-40	85	Ld-Ld	-	1975	510	820	5	n/a	1, 5a
20D821KH	5	510	AC	1	n/a	-40	125	Ld-Ld	-	1975	510	820	5	n/a	1, 5a
20D911K	5	550	AC	1	n/a	-40	85	Ld-Ld	-	2105	550	910	5	n/a	1, 5a
20D911KH	5	550	AC	1	n/a	-40	125	Ld-Ld	-	2105	550	910	5	n/a	1, 5a

Notes:

1. Suitable for Factory wiring only.
2. Suitable for Field and Factory wiring.
3. Series External Impedance required, see Electrical Ratings in the Recognition report.
4. Series External Overcurrent Protection required, see Electrical Ratings in the Recognition report.
5. Body of discrete component metal-oxide varistors (MOVs) flammability:
   a) Min. V-0 or VTM-0.
   b) Min. V-1 or VTM-1.
   c) Complies with IEC 60950-1, Edition 2.2, Annex Q/IEC62368-1 Annex G.8.2 needle flame testing requirements.
   d) Complies with IEC 60065, Edition 7.2, Annex G.1.1 needle flame testing requirements.

SPDs investigated for Type 1 applications are automatically suitable for Type 2 applications and may be marked for SPD Type 1 and/or Type 2 applications. SPDs only marked "SPD Type 2" are not suitable for Type 1 applications.

Where a minimum ambient temperature is not specified, assume 0°C unless the product is marked otherwise or with an Outdoor use Environmental Rating. See Electrical Equipment for Use in Ordinary Locations (AALZ) for details regarding Environmental Ratings.

$ - may be followed by one to three any numbers and/or letters

Marking: Company name or tradename "ARJ" , "BVR" , "DNR" , "HWR" , "HXR" , "JER" , "JGR" , "JKV" , "NDF" , "NFC" , "SAS" , "SLLS" , "VCR" , "VDR" , "VOR" or trademark , , , VOR , , XXVR , , DNR , MOVR , model designation and the Recognized Component Mark, on the product or on the smallest unit container in which the product is packaged.

Last Updated on 2019-09-20

Details - Catalog VDE approved products

Certificate no. 40028836

Back

Product	Varistor
Product group	PTC, NTC and VDR-resistors
Company	Cerglass MFG Inc No. 450 ZhongZhen 3rd Rd., Yingge District 23942 NEW TAIPEI CITY TAIWAN
Certification mark	VDE Registration
VDE Reg-No.	D267
Additional information	Appendix 100A : Type Code Appendix 101A : Type Code Appendix 102A : Type Code Appendix 103A : Type Code Appendix 104A : Type Code Appendix 105A : Type Code Appendix 106A : Type Code Appendix 107A : Type Code Appendix 108A : Type Code Appendix 109A : Type Code Appendix 110A : Type Code Appendix 111A : Type Code
Please note	The picture documentation may show testing labels pending approval by National Certification Bodies and they shall not be affixed to products prior to such an approval.

Standards	IEC 61051-2:1991 IEC 61051-2:1991/AMD1:2009 IEC 61051-2-2:1991 IEC 61051-1:2007

Type	Technical Data
05D180L to 05D680K	
05D820K to 05D471K	
07D180L to 07D680K	
07D820K to 07D561K	
10D180L to 10D680K	
10D201KJ to 10D112KJ	
10D820K to 10D112K	
14D270K to 14D680K	
14D820K to 14D751K	
20D270K to 20D680K	
20D820K to 20D911K	