承　　认　　书
APPROVAL　SHEET

编 号 No.	BTT010142B-D/4-B
日期 Date	2020.03.26

客　户 Customer	

品　名 Product	Thermal Links
系　列 Series	BTT Series

料号 Part No.		规格描述 Specification	备注 Remark
贝特电子 Betterfuse			
客　户 Customer			

环保特别提示 Special instructions for environmental protection
本产品：

供应商-贝特电子 Supplier-Betterfuse		零件承认章 Approval Signet	客　户 Customer	零件承认章 Approval Signet
制 作 Make	YaLan Wang	东莞市贝特电子科技股份有限公司		
审 核 Check	Fei Gao			
确 认 Approval	Zhimin Hu			

联络 Contact			
业务 Sales	电话 Telephone	手机 Cellphone	邮箱 E-mail
零件承认后敬请回签一份给我司留存，或将承认后的封面传真（0769-8352 1857）至我司，谢谢！			

Document Record

No.	Date	Modified Content	Page	Edition	Prepared/modified by	Checked by
1	2013.02.14	Draft	6	A	Runsong Zhong	Lianghua Guo
2	2015.12.25	Update UL certification	9,12~14,17	B/5	Jeffery	Lin Gao
3	2016.02.23	Add the 216℃ VDE certification	12	B/6	Jeffery	Lin Gao
4	2016.03.30	Add the Tf: 73, 84, 128, 157, 184, 216℃ UL certification	12	B/7	Jeffery	Helge
5	2016.5.13	Update the CCC certification	3,6	B/8	Jeffery	Helge
6	2016.8.23	Change the Tf 172, 240℃ operating temperature, remove the Ip		B/9	Jeffery	Hu Zhimin
7	2016.11.08	Change the operation temperature 71℃ to 69℃		B/10	Jeffery	Hu Zhimin
8	2017.11.23	Update the CCC certification		C/0	J.Q.	Zhimin Hu
9	2018.07.03	Update UL certification		C/1	J.Q.	Zhimin Hu
10	2018.10.16	Update UL certification	10	C/2	Xiang Xiong	Zhimin Hu
11	2019.01.22	Update 077 Operating temperature	6	C/3	Xiang Xiong	Zhimin Hu
12	2019.03.22	Update VDE certification	4	C/4	Xiang Xiong	Zhimin Hu
13	2019.07.01	Update product size drawing	5	C/5	Xiang Xiong	Zhimin Hu
14	2019.09.04	Add 249 operation	6	D/0	YaLan Wang	Zhimin Hu
15	2019.12.30	Add the Tf 229℃ CCC certification	6	D/1	YaLan Wang	Zhimin Hu
16	2020.02.26	Add the Tf 184℃ PSE certification	6	D/2	YaLan Wang	Zhimin Hu
17	2020.03.13	Add the Tf 229℃ PSE certification	6	D/3	YaLan Wang	Zhimin Hu
18	2020.03.26	Add the Tf 229℃ cURus certification	6	D/4	YaLan Wang	Zhimin Hu

ABLE OF CONTENTS

1. SCOPE AND DESCRIPTION

The following product specifications apply to fuses of the BTT series. The BTT series consists of thermal cutoff fuses for over-temperature protection.
The BTT series thermal fuses are widely used in various applications such as transformers, adapters, secondary batteries, household appliances, gas water heaters, lighting and other heating equipment.

2. GENERAL INFORMATION

General Description

The BTT thermal cutoff fuses are non-resetting single-pole and normally closed devices and provide accurate, reliable protection for high temperature applications against overheating through interrupting electric current. With their metal body and strong leads these fuses offer a sturdy built and high rated currents such as 10 or 15 Amperes.

Detailed Features

- Metal casing, epoxy sealing material
- Small size, Φ4.0mm×10mm
- 1.0mm lead wires made of tin or silver plated copper.
- Protection against harmful over-temperature in primary and secondary applications.
- Lead-free, RoHS compliant
- Designed according to IEC 60691, UL 60691, EN 60691, etc.

3. AGENCY APPROVALS

Agency	Agency File Number	Tf Range
c UL us	E346843	Tf: 73℃; 77℃; 84℃; 99℃; 113℃; 121℃; 128℃; 133℃; 142℃; 157℃; 172℃; 184℃; 192℃; 216℃;229℃； 240℃；
CCC	2013010205660964 2019010205257357	Tf: 73℃; 77℃; 84℃; 94℃；99℃; 113℃; 121℃; 128℃; 133℃; 142℃; 157℃; 172℃; 184℃;192℃; 216℃; 240℃ Tf: 229℃
PSE	PSE13020652 PSE13020653 PSE13020654 PSE13020655 PSE13020656 PSE13020657 PSE13020658 PSE13020659 PSE13020660 PSE20021602 PSE20021603	Tf: 240℃ Tf: 216℃ Tf: 192℃ Tf: 172℃ Tf: 142℃; 157℃ Tf: 121℃; 128℃; 133℃ Tf: 113℃; Tf: 84℃; 94℃; 99℃ Tf: 73℃; 77℃ Tf: 184℃ Tf: 229℃

	R 50273319	Tf: 73℃; 77℃; 84℃; 94℃; 99℃; 113℃; 121℃; 128℃; 133℃; 142℃; 157℃; 172℃; 192℃; 216℃; 240℃
	40041299	Tf: 73℃; 99℃; 113℃; 121℃; 133℃; 142℃; 157℃; 172℃; 184℃; 192℃; 216℃; 240℃
	SU05042-14004 SU05042-14005 SU05042-14006 SU05042-14002 SU05042-14003	Tf: 113℃ Tf: 157℃; 121℃; 128℃; 133℃; 142℃ Tf: 192℃; 172℃ Tf: 240℃; 216℃ Tf: 99℃; 73℃; 77℃; 84℃; 94℃

4. PART NUMBERING SYSTEM

4.1 Part Number

Example: BTT010142B

BT	T	010	142	B
(1)	(2)	(3)	(4)	(5)

(1)	Model	...BT...	Better's Brand
(2)	Product Type.....	...T...	Thermal fuse
(3)	Rated Current.....	...010...	Rated current: 10A
		...015...	Rated current: 15A
(4)	Functional Temperature...	...142...	Tf: 142℃
(5)	Size	...A...	Special series with lead length 18mm
		...B...	Normal series with lead length 18mm
		...C...	Special series with lead length 43mm
		...D...	Normal series with lead length 43mm

5. CONSTRUCTION AND MECHANICAL CHARACTERISTICS

Construction (cross section)

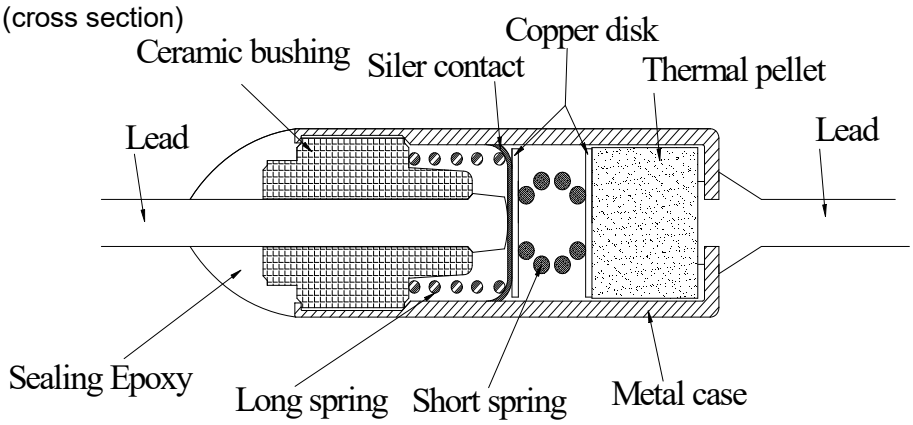

Dimensions (units: mm)

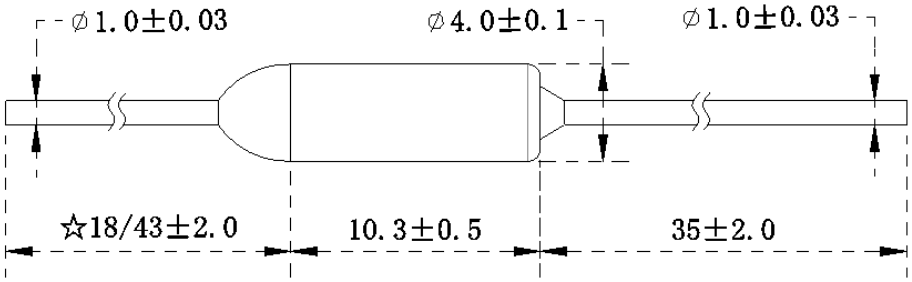

☆ BTTXXXXXXA: Special, length 18mm
BTTXXXXXXB: Normal, length 18mm
BTTXXXXXXC: Special, length 43mm
BTTXXXXXXD: Normal, length 43mm

6. OPERATION PRINCIPLE

Before action:

In normal condition the thermal pellet keeps the Short Spring in tension, which provides contact between the copper disk and the silver contact. All parts,lead A, silver contact,metal case and lead B are connected and electric circuit current can pass freely through the thermal fuse.

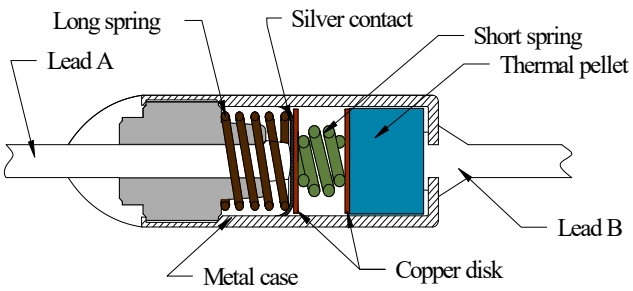

Cut off:

When the temperature increases and reaches the Rated Functioning Temperature(Tf), the thermal pellet starts to melt and liquefies. this will release the Long Spring and separates the silver contact from the lead, cutting off the current.

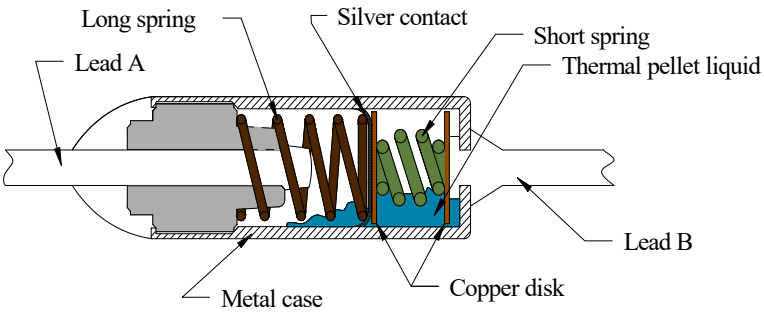

7. ELECTRICAL SPECIFICATIONS

Electrial Characteristics at 25℃

NO.	Part number	Tf (℃)	Operating Temperature (℃)	Th (℃)	Tm (℃)	Ir (A)		Voltage (V)	Approvals					
									UL	CCC	TUV	PSE	VDE	KC
1	BTT0**073	73	69±2	50	150	10A	15A	250Vac	●	●	●	●	●	●
2	BTT0**077	77	72±2	62	150	10A	15A	250Vac	●	●	●	●	○	●
3	BTT0**084	84	80±3	50	150	10A	15A	250Vac	●	●	●	●	○	●
4	BTT0**094	94	91+3-2	65	150	10A	15A	250Vac	○	●	●	●	○	●
5	BTT0**099	99	95±2	71	150	10A	15A	250Vac	●	●	●	●	●	●
6	BTT0**113	113	108+2-3	95	180	10A	15A	250Vac	●	●	●	●	●	●
7	BTT0**121	121	117±3	106	180	10A	15A	250Vac	●	●	●	●	●	●
8	BTT0**128	128	124±3	102	160	10A	15A	250Vac	●	●	●	●	○	●
9	BTT0**133	133	129+3-2	105	160	10A	15A	250Vac	●	●	●	●	●	●
10	BTT0**142	142	138±3	110	160	10A	15A	250Vac	●	●	●	●	●	●
11	BTT0**157	157	152±2	130	175	10A	15A	250Vac	●	●	●	●	●	●
12	BTT0**172	172	168±3	145	190	10A	15A	250Vac	●	●	●	●	●	●
13	BTT0**184	184	180±2	160	210	10A	15A	250Vac	●	●	○	●	●	○
14	BTT0**192	192	189±2	170	300	10A	15A	250Vac	●	●	●	●	●	●
15	BTT0**216	216	213±3	190	300	10A	15A	250Vac	●	●	●	●	●	●
16	BTT0**229	229	225±2	200	380	10A	15A	250Vac	●	●	○	●	○	○
17	BTT0**240	240	235±2	200	300	10A	15A	250Vac	●	●	●	●	●	●

Note: (1) **: Response the 10 or 15.

(2) ●=Approved ○=Pending

(3) Except CCC certification,in UL&VDE&TUV&PSE&KC certifications, for BTT0**077 by Th is 50° C;for BTT0**113 by Th is 85° C,Tm is 150° C; for BTT0**121 by Th is 95° C,Tm is 160° C.

(4) The 125VAC certification only for UL.

Ratings	Indicator	Description
Rated Functioning Temperature	Tf	The temperature at which the thermal cutoff fuse changes its state of conductivity and opens the circuit with detection current of <10mA as the only load. The temperature tolerance for UL CSA and VDE standards is +0. -10ºC
Hold Temperature	Thold	The maximum temperature at which a thermal cutoff can be maintained while conducting rated current for 168 hours without causing a change in the conductivity to open the circuit.
Maximum Temperature Limit	Tm	At the rated voltage, the temperature the fuse can withstand for 10 minutes at highest temperature rating without change in the conductivity
Rated Current	Ir	The maximum current which the thermal cutoff fuse is able to carry and not affect its electrical characteristics.
Rated Voltage	Vr	The maximum voltage which the thermal cutoff fuse is able to carry and not affect its electrical characteristics.

7.1 Test Conditions

7.1.1 Resistance Standard

Test Environment Temperature: 25±5℃

Test Conditions：Centering on the shell, 25 mm (diagram below)

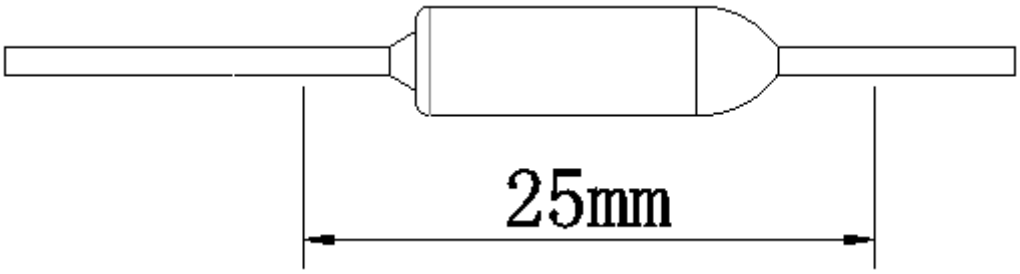

Standard：less than 1.5mΩ

7.1.2 Insulation Resistance

Test Conditions: After fusing between wire and the wire

Test Standard: DC 500V; more than 1000 MΩ

7.1.3 Withstand Voltage

Test Conditions: After fusing between wire and the wire

Test Standard: Bear AC500V; No damage for 1 minute ontology (leakage current: 0.5 mA)

7.2 Storage Environment

Please put the temperature fuse in the packing , storage in temperature 10 ℃ to 40 ℃, relative humidity 30-75%, the fuse individual parts have silver plating processing, when by sulfide, there will be change by color and affect the welding effect, please note that don't make the product contact sulfide gas.

7.3 Mark

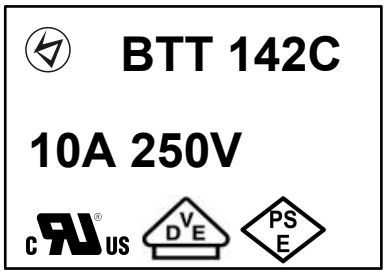

Note:

: Betterfuse Mark

BTT : Series Name

10A : Rated Current

250V : Rated Voltage

142℃ : Action Temperature

: Safety Certification

8.INSTALLATION AND SOLDERING

1. Installation Location

1.1 Make sure that the thermal fuse and its leads are fully able to detect ambient heat.

1.2 Ensure that the thermal fuse in your design is located as

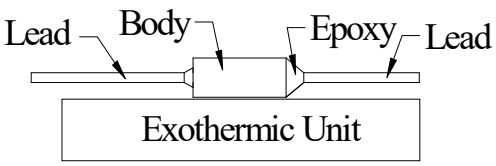

close to the source of a heat risk as possible.

2. Lead Forming

2.1 When bending the thermal fuses, make sure the bending point is at least 3mm away from the thermal fuses body.

2.2 When bending then thermal fuses, make sure that the fuse body and epoxy shows no signs of cracking or breaking.

2.3 During assembly and normal operation, make sure the thermal fuses is not subjected to mechanical force.

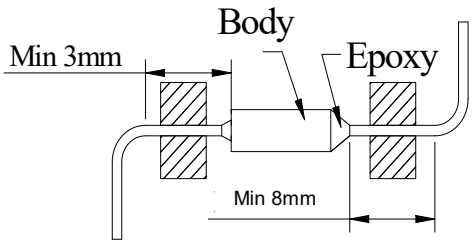

3. Soldering

3.1 Do not use solder on low temperature models.

3.2 Do soldering work on the leads as far away from the fuse body as possible.

3.3 Make sure to keep soldering time as short as possible. To shorten the time, employ pre-soldering process at the intended soldering area. Use a heatsink to prevent heat.

3.4 After soldering, check resistance to ensure that the thermal fuses has not been damaged.

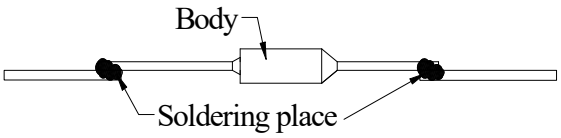

4. Connections in electronic circuit

4.1 Do not let the lead contacts and epoxy get connected with the fuses body. Do not connect to other conductive parts such as metal.

4.2 If the thermal fuses' body is made of metal, consider its effect on other components in the electronic circuit.

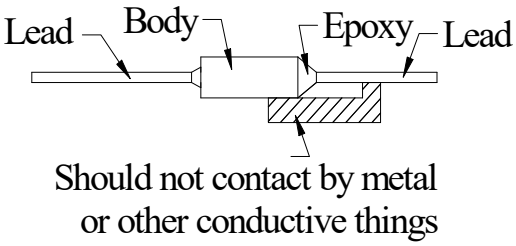

5. Handling and Storage

5.1 During transport and assembly, make sure that the thermal fuse is not subjected to strenuous vibrations, it is maybe cause damage to fuses.

5.2 Avoid any mechanical force that maybe cause damage to thermal fuses.

5.3 The shelf life is 12 months storage, during which the fuse must avoid sunlight and dusty environment.

9.ORDERING INFORMATION

The following information are necessary in order to place your order with us correctly:

Series	Function Temperature (Tf)	Supplementary Code	Qty
BTT			

10.PACKING INFORMATION

Packing details

Unit:mm

Plastic bag

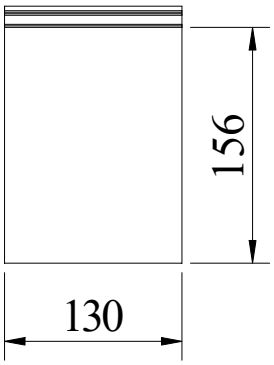

Inner Packaging Box

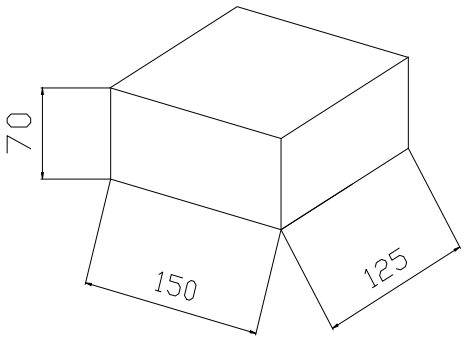

Master Carton

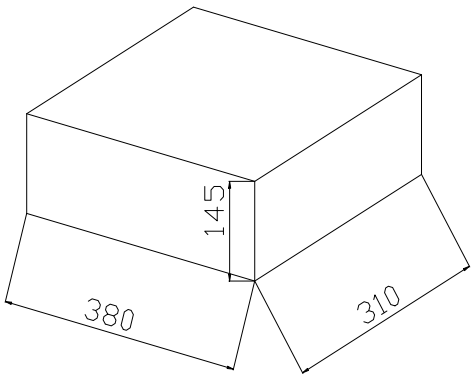

Net Weight	247g	Inner box weight	1.23kg	Master Carton Weight	14.6kg
Qty per bag	250pcs	Qty per box	1000pcs	Qty per carton	10000pcs

东莞市贝特电子科技股份有限公司
Room 601 of 16 Block, Xinzhuyuan, No.4，Xinzhu Road, Songshanlake Hightech Industrial Development Zone, Dongguan City, Guangdong P.R.C
中国广东省东莞市松山湖国家高新技术产业开发区新竹路 4 号新竹苑 16 座办公 601
Tel: +86 769-2307 8212 Fax: +86 769-8352 1857
Web: **www.betterfuse.com** Email: info@betterfuse.com