承　　认　　书
APPROVAL　SHEET

编 号 No.	BTB2021150-C/4-B
日期 Date	2022.03.18

客　户 Customer	

品　名 Product	
系　列 Series	BTB Series

料号 Part No.		规格描述 Specification	备注 Remark
贝特电子 Betterfuse			
客　户 Customer			

环保特别提示 Special instructions for environmental protection
本产品：

供应商-贝特电子 Supplier-Betterfuse		零件承认章 Approval Signet	客　户 Customer	零件承认章 Approval Signet
制 作 Make				
审 核 Check				
确 认 Approval				

联络 Contact			
业务 Sales	电话 Telephone	手机 Cellphone	邮箱 E-mail
零件承认后敬请回签一份给我司留存，或将承认后的封面传真（0769-8352 1857）至我司，谢谢！			

Document Record

No.	Date	Modified Content	Page	Edition	Prepared/modified by	Checked by
1	2018.03.24	Draft		A/0	J.Q.	Zhimin Hu
2	2018.10.16	Add the UL certification	8	A/1	Xiang Xiong	Zhimin Hu
3	2018.10.18	Add the CCC,PSE and TUV certification	8	A/2	Xiang Xiong	Zhimin Hu
4	2018.10.24	Add the KC certification	5	A/3	Xiang Xiong	Zhimin Hu
5	2018.12.05	Modifying UL certification number	3	A/4	Xiang Xiong	Zhimin Hu
6	2019.04.03	Add the UL certification of Tf:135C,145C,150C	3,5	A/5	Xiang Xiong	Zhimin Hu
7	2019.07.10	Update 125C opreating temperature	5	B/1	Xiang Xiong	Zhimin Hu
8	2019.07.16	Add 115C 125C 130C VDE certification	3,5	B/2	Xiang Xiong	Zhimin Hu
9	2019.08.06	Update product types	4	B/3	YaLan Wang	Zhimin Hu
10	2020.03.27	Add Tf:102C	5	B/4	YaLan Wang	Zhimin Hu
11	2020.10.17	Update KC certification file and CCC certification	3,10,11 22-27	B/5	YaLan Wang	Zhimin Hu
12	2020.10.26	Add PSE certification of 102C.	3,5	B/6	YaLan Wang	Zhimin Hu
13	2020.12.31	Add UL and TUV certification of 102C.	3,5	B/7	YaLan Wang	Zhimin Hu
14	2021.01.12	Add CCC certification of 102C.	3,5,6	C/1	Wenshan Chen	Zhimin Hu
15	2021.04.22	Add KC certification of 102C,Update label.	3,5,7	C/2	Wenshan Chen	Zhimin Hu
16	2021.06.01	Update VDE certification	35-39	C/3	Wenshan Chen	Zhimin Hu
17	2022.03.18	Update Part number	4	C/4	Wenshan Chen	Zhimin Hu

TABLE OF CONTENTS

1. SCOPE AND DESCRIPTION

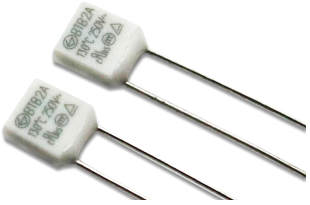

The following product specifications apply to fuses of the BTB series. The BTB series consists of thermal cutoff fuses for over-temperature protection. The BTB series thermal fuses are widely used in various applications such as transformers, adapters, secondary batteries, household appliances, gas water heaters, lighting and other heating equipment.

2. GENERAL INFORMATION

General Description

The BTB thermal cutoff fuses are non-resetting single-pole and normally closed devices and provide accurate, reliable protection for high temperature applications against overheating through interrupting electric current. With their Plastic body and strong leads these fuses offer a sturdy built and high rated currents such as 2 Ampere.

Detailed Features

- Epoxy sealing material
- Small size, 5.8mm×5.8mmx2.3mm
- Protection against harmful over-temperature in primary and secondary applications.
- Lead-free, RoHS compliant
- Designed according to IEC 60691

3. AGENCY APPROVALS

Agency	Agency File Number	Tf Range
c UL us	E346843	Tf: 102℃ 115℃ 125℃ 130℃ 135℃ 145℃ 150℃
CCC	2020970205000064	Tf: 102℃ 115℃ 125℃ 130℃ 135℃ 145℃ 150℃
PSE	PSE18021362 PSE18021361 PSE18021360 PSE20021740	Tf: 115℃ Tf: 125℃ 130℃ 135℃ Tf: 145℃ 150℃ Tf: 102℃
	R 50412937	Tf: 102℃ 115℃ 125℃ 130℃ 135℃ 145℃ 150℃
	SU05071-20001 SU05042-18004 SU05042-18005	Tf: 102℃ Tf: 115℃ Tf: 125℃ 130℃ 135℃ 145℃ 150℃
DVE	40050332	Tf: 115℃ 125℃ 130℃

4. PART NUMBERING SYSTEM

4.1 Part Number

Example: BTB2021150

BT	B	2	02	115	0
(1)	(2)	(3)	(4)	(5)	(6)

(1)	Model ……	…BT…	Better's Brand
(2)	Product series……	…B…	2A series
(3)	Product Color……	…2…	White shell
(4)	Product line……	…02…	CP line
(5)	Functional Temperature…	…115…	Tf: 115℃
(6)	Complement Code……	…0…	Normal

BT	B	2	02	115	0
Better	A：1A series	1：black shell	01：Tin plated copper wire	TF temperature	Complement code
	B：2A series	2：white shell	02：CP line		
			03:Tin plated copper wire+Insulation casing		
			04:CP line+Insulation casing		

5. CONSTRUCTION AND MECHANICAL CHARACTERISTICS

Construction (cross section)

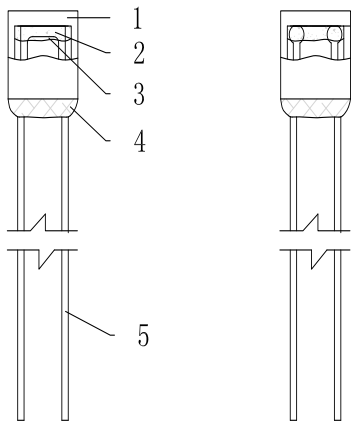

Before action After action

No.	Part Name	Material Name
1	plastic case	PA66
2	fusing element	Fusible alloy
3	flux	Rosin compound
4	sealing	Epoxy Resin
5	lead wire	Tin plated copper wire

Dimensions (units: mm)

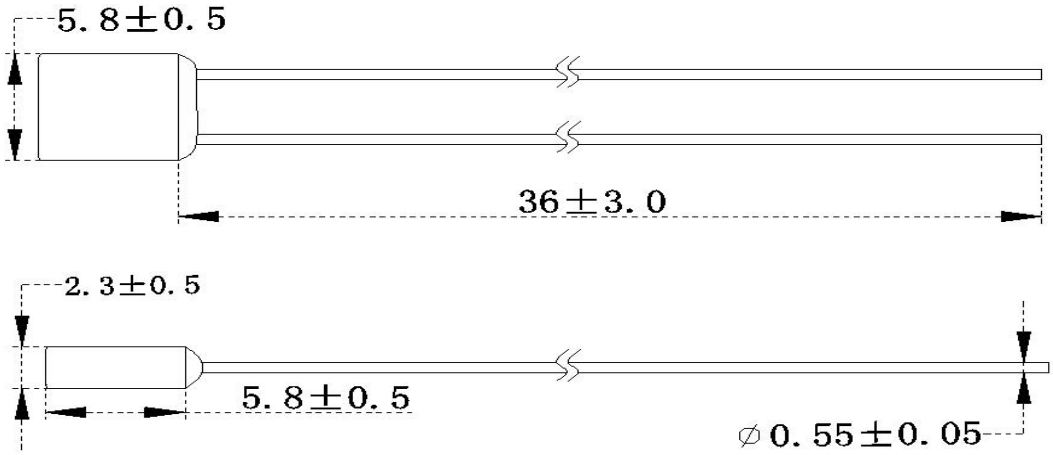

6. ELECTRICAL SPECIFICATIONS

Electrial Characteristics at 25℃

NO.	Part number	Tf (℃)	Operating Temperature（℃）	Th (℃)	Tm (℃)	Rated Current (A)	Voltage (V)	Approvals					
								UL/C-UL	TUV	CCC	PSE	KC	VDE
1	BTB 102℃	102	98±2	80	203	2A	250V~	●	●	●	●	●	○
2	BTB 115℃	115	111±2	100	203	2A	250V~	●	●	●	●	●	●
3	BTB 125℃	125	120±2	106	203	2A	250V~	●	●	●	●	●	●
4	BTB 130℃	130	125±2	108	203	2A	250V~	●	●	●	●	●	●
5	BTB 135℃	135	131±2	116	203	2A	250V~	●	●	●	●	●	○
6	BTB 145℃	145	140±2	127	203	2A	250V~	●	●	●	●	●	○
7	BTB 150℃	150	144±2	129	203	2A	250V~	●	●	●	●	●	○

Note:1.○ means pending

2.In ULcertification,the Voltage also including AC 125V and DC 60V (DC 60V is limited to 115C and 125C)

3.● means approved

Ratings	Indicator	Description
Rated Functioning Temperature	Tf	The temperature at which the thermal cutoff fuse changes its state of conductivity and opens the circuit with detection current of <10mA as the only load. The temperature tolerance for UL CSA and VDE standards is +0. -10ºC
Hold Temperature	Thold	The maximum temperature at which a thermal cutoff can be maintained while conducting rated current for 168 hours without causing a change in the conductivity to open the circuit.
Maximum Temperature Limit	Tm	At the rated voltage, the temperature the fuse can withstand for 10 minutes at highest temperature rating without change in the conductivity
Rated Current	Rated Current	The maximum current which the thermal cutoff fuse is able to carry and not affect its electrical characteristics.
Rated Voltage	Voltage	The maximum voltage which the thermal cutoff fuse is able to carry and not affect its electrical characteristics.

6.1 Test Conditions

6.1.1 Insulation Resistance

A .Lead and shell

For the thermal fuse body in testing the insulation resistance between wire and plastic shell, should be the first resistance limit pointer adjustment for the position of the 2 m Ω, then use the foil package thermal fuse body shell, then measure the insulation resistance between wire and metal foil.When indicating value of the insulation resistance is greater than 2 m Ω;NG signals does not produce, found the sample is qualified.

B. (after disconnecting) between the two lead
On heat fusing two fuses, in testing the insulation resistance between the resistance limit pointer adjustment to the first position in the 0.2 M Ω, then measure the heat fusing the insulation resistance between the two leads.When indicating value of the insulation resistance is greater than 0.2 M Ω;NG signals does not produce, found the sample is qualified.Lead and shell
For the thermal fuse body in testing the insulation resistance between wire and plastic shell, should be the first resistance limit pointer adjustment for the position of the 2 m Ω, then use the foil package thermal fuse body shell, then measure the insulation resistance between wire and metal foil.When indicating value of the insulation resistance is greater than 2 m Ω;NG signals does not produce, found the sample is qualified.

6.2 Dielectric strength
A. fuses with the shell
On the thermal fuse body between the wire and plastic shell to wear strength test, the fuse body shell with metal foil, and then between the wire and metal foil test voltage of 1500 v (AC), a minute, if you do not see any discharge or breakdown phenomenon is found for qualified.
B. (after disconnecting) between the two lead
On the thermal fuse body fight between two fuses in strength test, applying test voltage of 500 v (AC) between the two leads, a minute, if you do not see any discharge or breakdown phenomenon is found for qualified.

6.3 Mark

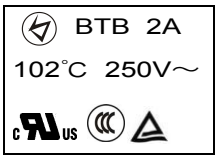

Tf:102C

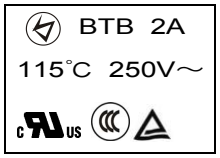

Tf:115C

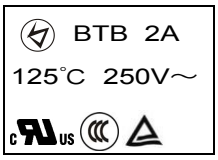

Tf：125C

Note:

: Betterfuse Mark
BTB : Series Name
2A : Rated Current
250V : Rated Voltage
115°C:Rated Functioning Temperature

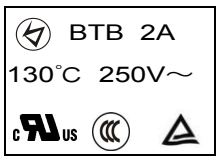

Tf:130C

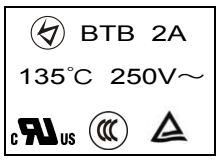

Tf:135C

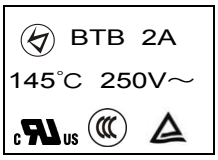

Tf:145C

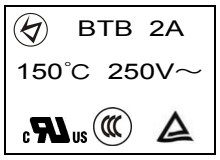

Tf:150C

7.ORDERING INFORMATION

The following information are necessary in order to place your order with us correctly:

Series	Function Temperature (Tf)	Supplementary Code	Qty
BTB			

8.PACKING INFORMATION

Packing details

Plastic bag

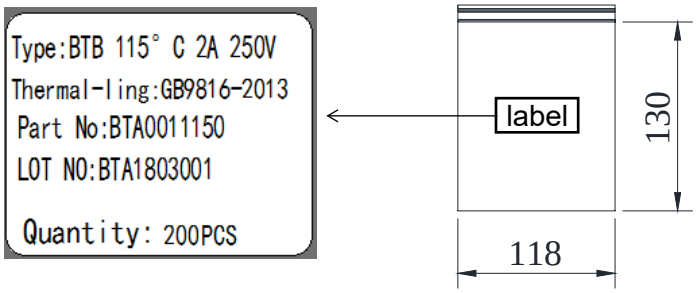

Inner Packaging Box

Master Carton

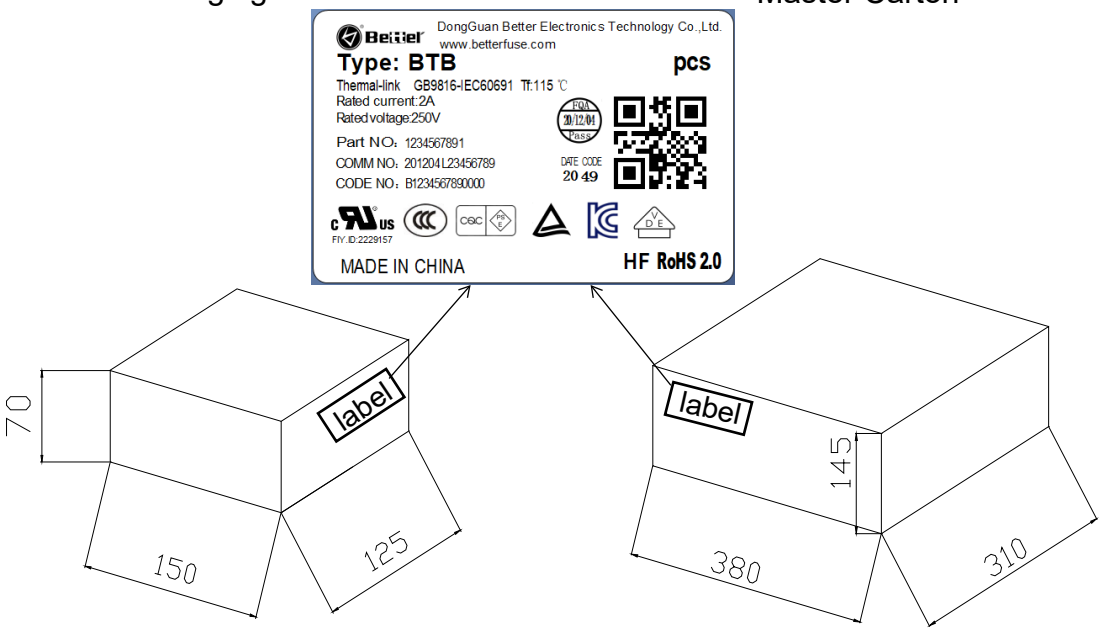

Net Weight	54.0g	Inner box weight	346g	Master Carton Weight	3.86kg
Qty per bag	200pcs	Qty per box	1000pcs	Qty per carton	10000pcs

东莞市贝特电子科技股份有限公司
Room 601 of 16 Block, Xinzhuyuan, No.4，Xinzhu Road, Songshanlake Hightech Industrial Development Zone, Dongguan City, Guangdong P.R.C
中国广东省东莞市松山湖国家高新技术产业开发区新竹路 4 号新竹苑 16 座办公 601
Tel: +86 769-2307 8212 Fax: +86 769-8352 1857
Web: **www.betterfuse.com** Email: info@betterfuse.com