Specification Approval Sheet

Name： Lithium-Ion Rechargeable Battery

Model： AKYGA AKY1877

SPEC：3.7V / 5300mAh

Number: LP923962-1S2P

Specification Modification Records

Modification Time	Descriptions	Issued Date	Approved By
	Release 1	2024-01-16	

Content

Any copies are invalid without our company's approval

Specification Approval sheet

1. Scope

This document describes the product specification and using condition of the Lithium-ion Polymer rechargeable cell supplied by Akyga battery

2. Product

2.1 Name： Lithium-ion polymer rechargeable cell

2.2 Battery Model：923963-2P

3. Specification

Item	Specification		
3.1 Nominal voltage	3.7 V		
3.2 Typical capacity Minimal capacity	5300 mAh 5200 mAh		at room temperature of 25±2℃ discharge from 4.2V to 4.2V at 0.2C mA
3.3 Initial impedance	≤ 160 mΩ		The Specifications included cell;PCM;wire
3.4 Full charge voltage	4.20±0.02 V		
3.5 Pack Voltage	3.8-4.1 V		As of shipment.
3.6 Standard charge current	1060 mA		
3.7 Max charge current	2650 mA		
3.8 Charging method	CC/ CV		charge with constant current 0.2C to 4.2V, then charge with constant voltage 4.2V till charge current is less than 0.01C
3.9 Standard discharging current	1060 mA		
3.10 Max discharge current	2650 mA		
3.11 Discharge cut-off voltage	3.00 V		
3.12 Operating environment:	Charging 65±20%RH	10°C ~ 15°C	MAX Charge current：0.2C
		15°C ~ 45°C	MAX Charge current：0.5C
	Discharging	-10℃~60℃；65±20%RH	
3.13 Storage environment	-10℃~25℃ 65±20%RH		storage for a long time(≥3months) and the storage condition shall be：≤25℃；65±20%RH；3.7~3.9V
3.14 Pack Weight (Approx)	48.0 g		

4.1 Outward appearance and Dimension

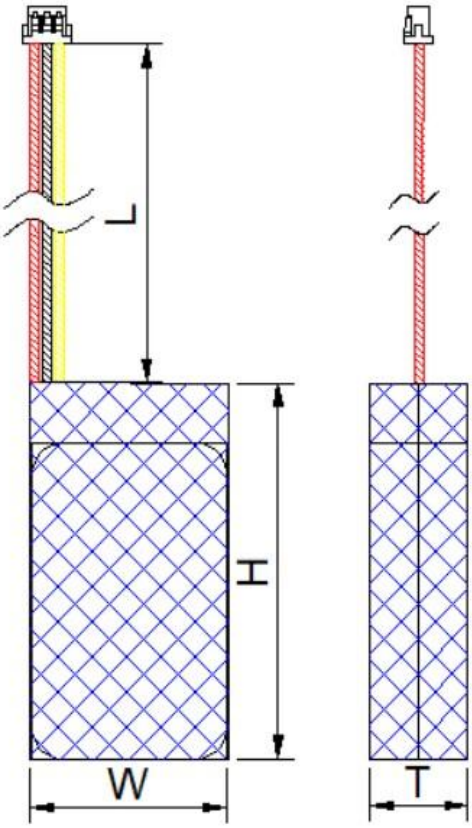

mm

	Max: 19.0
	Max: 39.5
	Max: 66.5
	75±5

Battery thickness expansion is 7% ± 3%

4.2 Basis BOM List

Item	Reference	Material name	Model/Specification	Quantity	Remark
1	Cell	923963	3.7V 2650 mAh	2	
2	PCM	ZN-PCM	HY-4035 DW01+8205A*2+10KNTC	1	
3	Red wire	UL1571 AWG24#	Red	1	
4	Black wire	UL1571 AWG24#	Black	1	
5	Yellow wire	UL1571 AWG24#	Yellow	1	
6	Connector	ZH-3P	（Red-Black-Yellow）	1	

4.3 Outward appearance and Dimension

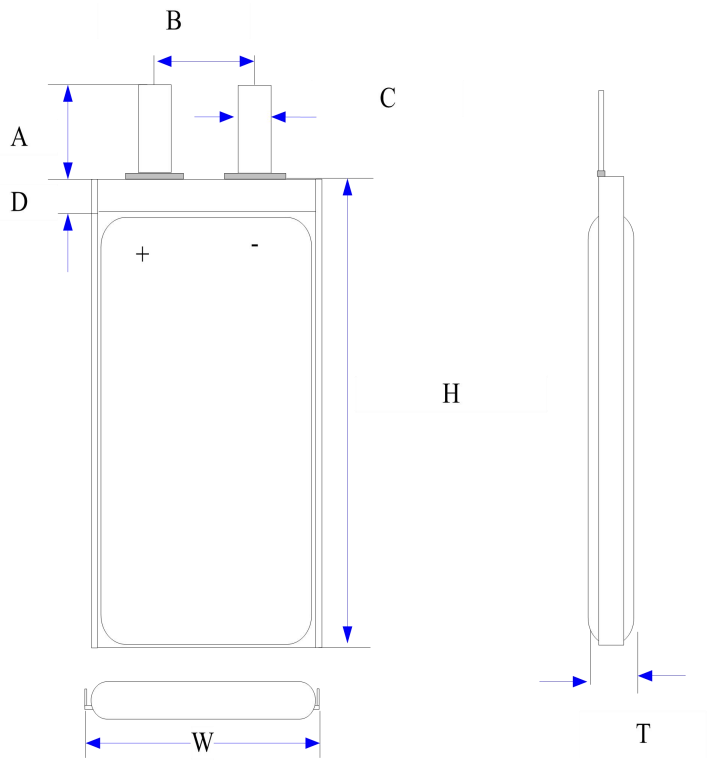

: mm

	Max: 9.2
	Max: 39.0
	Max: 62.0
	8.0±1.5
	21.0±2
	4.0±0.2
	3.5±0.5
	双折边

Battery thickness expansion is 7% ± 3%

5.Packing drawing

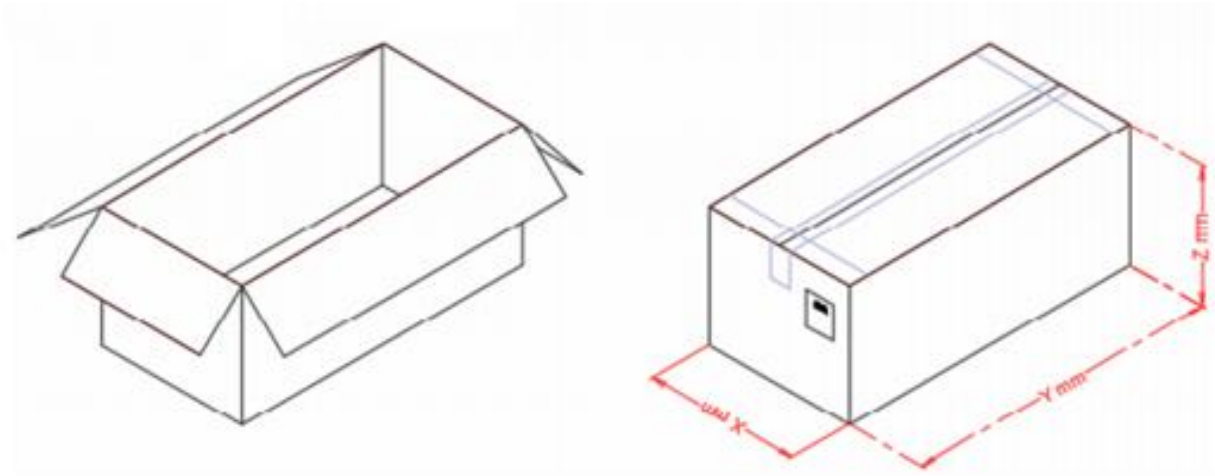

NO.	Items	Description
1	Packing style	Carton
2	Carton Sealing method	Transparent adhesive tape

5.1 PCM/

Symbol	Name	MIN	Typical.	Max	Unit
VDET1	Over-Charge detect voltage	4.25	4.3	4.35	V
VDET2	Over-discharge detect voltage	2.30	2.45	2.60	V
IEC	Excess Current threshold	4.0	---	9.0	A
IDD	Supply current	1	3.5	7	μA
RD	Internal resistance in normal operation	---	45	60	mΩ

5.2 BOM

1	IC	U1	DW01 /SOT-23-6	1
2	MOSFET	U2/U3	8205 /TSSOP-8	2
3		R1	100Ω ±5%/0603	1
4		R2	1KΩ ±5%/0603	1
5		R3	NTC 10K±5%/0603	1
6		C1	0.1μF/-20%/+80%/16V/0402	1
7		B-/B+	7*3*0.3	2
8		PCB	HY-4035	1

5.3 Schematic diagram

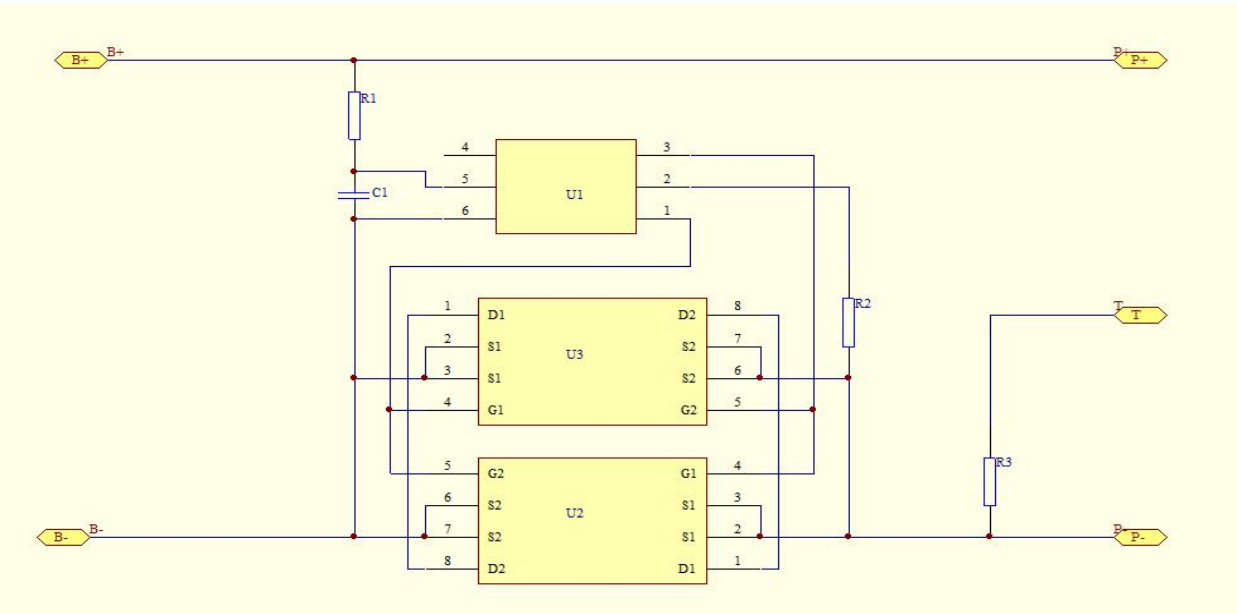

5.4. Circuit PCB diagram

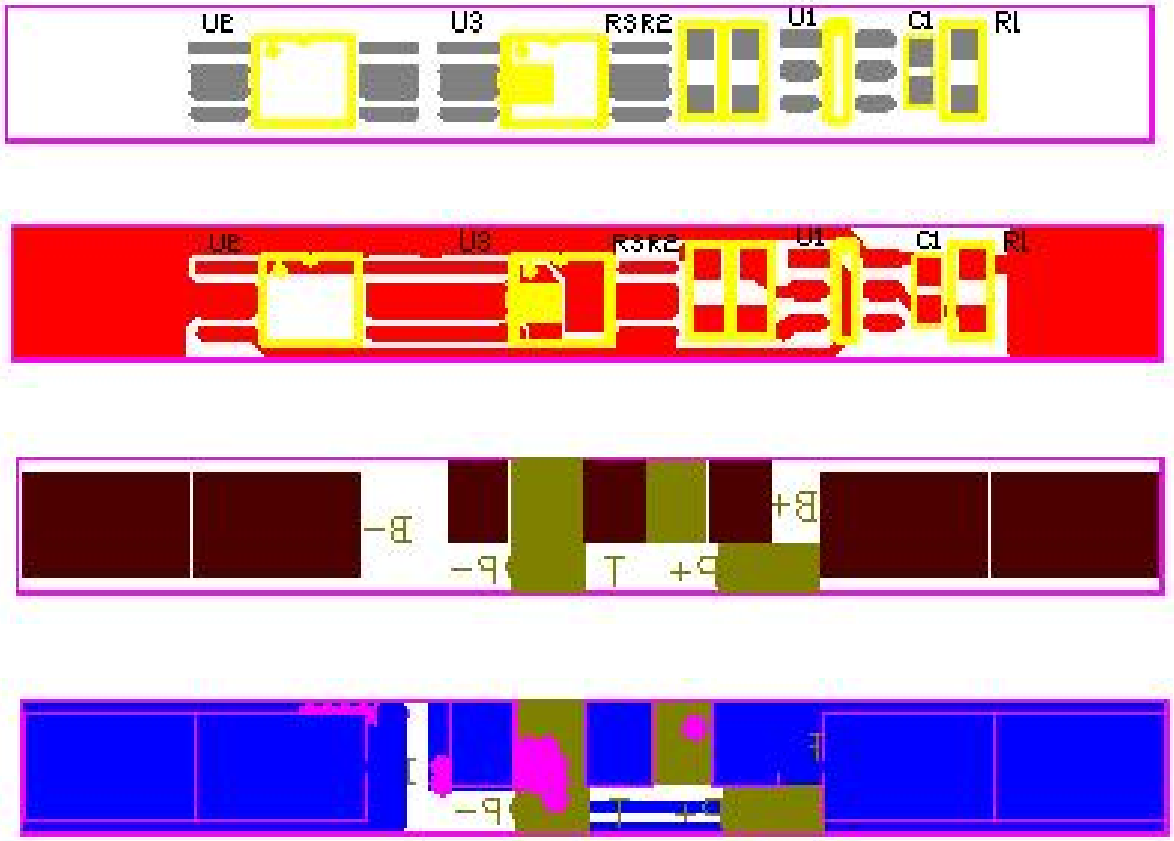

5.5. Pad description

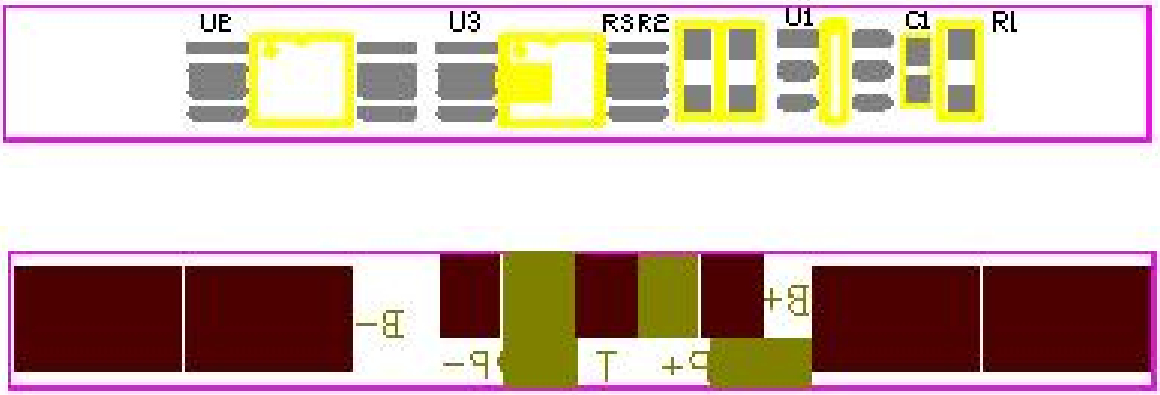

6. Visual Inspection

There shall be no such defect as scratch,flaw,crack,and leakage,which may adversely affect commercial value of the cell.

7. Cell Specification

7.1 Electrical characteristics

Items	Test Method and Condition	Criteria
7.1.1 Full charge	charge to 4.2V with 0.2C ,then go on charging with constant voltage 4.2V till charge current declines to 0.01C .	/
7.1.2 Initial capacity	The capacity means the discharge capacity of the cell that was discharged to 4.2V with discharge current of 0.2C within one hour after the full charge.	⩾ 5200 mAh
7.1.3 Cycle life	Cycle life is the capacity of the cell that was repeated 300 cycles with full charge and then discharging to4.2V with discharge current of 0.2C .	⩾ 80% Initial capacity
7.1.4 Initial impedance	Cell resistance was measured at AC 1KHz after 50% charge and the test temperature was 25℃.	⩽ 160 mΩ
7.1.5 Temperature Capacity Test	The discharge capacity of contrast, under the conditions of different temperature in 25 ℃ under the condition of normal temperature after full charge of the battery, as shown in the table below normal temperature and high temperature to the capacity of 0.2 C to 3.0 V, low temperature is 0.2C to 2.5 V discharge capacity.the time between charging and discharging must beyond 3 hours.	

Charge temperature	Discharge temperature			
25℃	-10℃	0℃	25℃	60℃
	⩾70%	⩾80%	100%	⩾85%

Items	Test Method and Condition	Criteria
7.1.6 Self-discharge	After the full charging, storage the cells in a temperature of 25℃ for 28 days, then measure the capacity with discharge current of 0.2C till 4.2V.	Capacity ⩾ 90% Initial capacity
7.1.7 store 存放	At 50% SOC and specified temperature, recoverable capacity in % vs. time	

-10℃ to 25℃ 12months	25℃ to 40℃ 3months	40℃ to 50℃ 1month	50℃ to 65℃ 4hr	
⩾85%	⩾85%	⩾80%	⩾80%	

7.2 Mechanical characteristics

Items	Test Method and Condition	Criteria
7.2.1 Vibration Test	Fixed the fully charged cell to vibration table and subjected to vibration cycling that the frequency is to be varied at the rate of 1Hz per minute between 10Hz and 55Hz, the excursion of the vibration is 0.8mm. The cell shall be vibrated for 90 ~100 minutes per axis of XYZ axes.	No explosion No fire, No leakage.
7.2.2 Drop Test	The cell was dropped freely from the height of 1000mm to the concrete floor, and each surface was dropped once	No explosion, No fire

7.3 Safety

Items	Test Method and Condition	Criteria
7.3.1 Crush Test	The pressure on the surface of the fully charged cell do not stop being raised until 17.2 Mpa when the cell is crushed by two flat surfaces.(Max13kN)	No explosion, No fire.
7.3.2 Heating	After full charging at 0.1C, put the battery in the baking oven and start , the temperature of the oven is to be raised at a rate of 5℃ per minute to a temperature of 130±2℃, remain for 10minutes at that temperature	No explosion, No fire .
7.3.3 Short-Circuit Test	After full charge, the positive and negative polarities are connected together by a copper wire whose resistance is less than or equal to 80±20mΩ.	
7.3.4 Over-charge Test	The cell is overcharged to 4.6V with a current of 3C and holded for 8 hours.	

8. Standard environmental test condition/

Unless otherwise specified, all tests stated in this Product Specification are conducted at below condition.

Temperature：25±2℃ Relative humidity ： 65±20%

9. Charging/

Charging current and charging voltage should be less than specified in the Product Specification.

The charger shall be designed to comply with Product Specification.

It is dangerous that charging with higher current or voltage than Product Specification may cause damage to the cell electrical,mechanical safety performance.

10. warranty/

Period of warranty: 12 months after sales;

Range of warranty: There is low voltage, expansion or leakage with the correct use of the cell in the period of warranty.

11. Liability/

Please use the Lithium-ion Polymer rechargeable cells supplied by Akyga battery under the product specification .It may cause fire or expansion if the cells are used incorrect .We will not guarantee the safety unless the cells are used under the product specification.

12. Identification/

Warnings would better be marked on the surface of the battery which is tied up by certain cells：

*Using the charger designated by the manufacturer.

*Don't throw the battery in fire or heat it .

*Don't short-circuit .

*Don't unpack the battery or change its structure.

13. Notice for Designing Battery Pack

13.1 Battery Pack design

13.1.1 Battery shell should be with enough mechanical strength, to protect the inner cell from mechanical shock;

13.1.2 No cell movement in the battery pack should be allowed;

13.1.3 No Sharp edge or bulge components should be inside the pack containing the battery;

13.2 Avoid some components to contact the edge of packing foil of batteries ;

13.3 Tab connection

13.3.1 Ultrasonic welding or spot welding is recommended to connect battery with PCM or other parts;

13.3.2 The tab is not very firm. Don't bend the tab。 especially the positive pole. It will rupture easily;

13.3.3 If apply manual solder method to connect tab with PCM, below notice is very important to ensure battery performance:

1). The solder iron should be temperature controlled and ESD safe;

2). The soldering iron temperature should be 360-420℃;

3). Soldering time should not be longer than 3s ;

4). Soldering times should not exceed 3 times ,secondary welding should be done after the poles are cooling;

5). Directly heat cell body is strictly prohibited;

6). Don't let the electric iron contact the surface of the cell.

Please use the battery according to the provisions as below ,Incorrect using of the battery may cause fire or expansion,and destroy its performance.

14.Warnings

Soft Aluminium Foil: The soft aluminum packing foil may be damaged by sharp matter such as Ni-tabs, pins and needles or other tooling and fixtures.

1) Do not strike Cells with any sharp matter.

2) Trim your nail or wear gloves before taking Cells.

3) Clean worktable to make sure that there is no sharp particle.

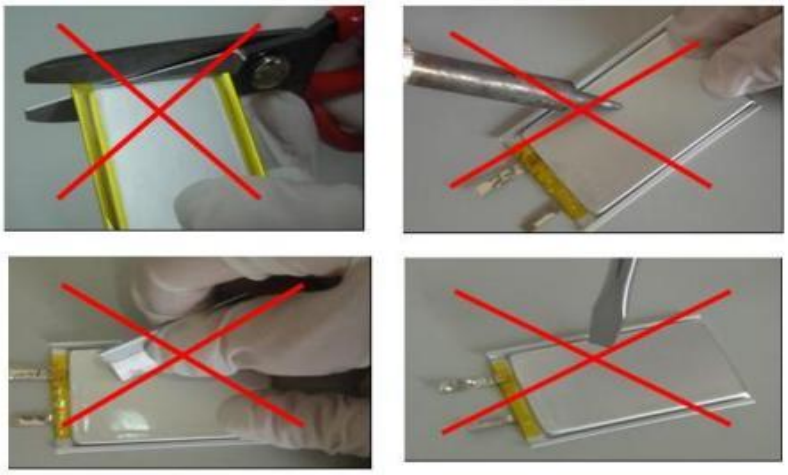

Top Sealing Edge: Sealing edge on the top of the Cell is very flimsy and easy to be delaminated. Do not bend or fold this area.

Tabs:The Cell tabs are easy to be broken especially for Aluminum tab. Do not bend the tabs.

Side Sealing Edge: The side sealing edge has been folded and fixed in cell forming processes and passed hermetic test. The Aluminum foil may brake by re-folding time after time. Don't open and refold this edge.

Mechanical Shock:Do not drop shock or bend Cell body

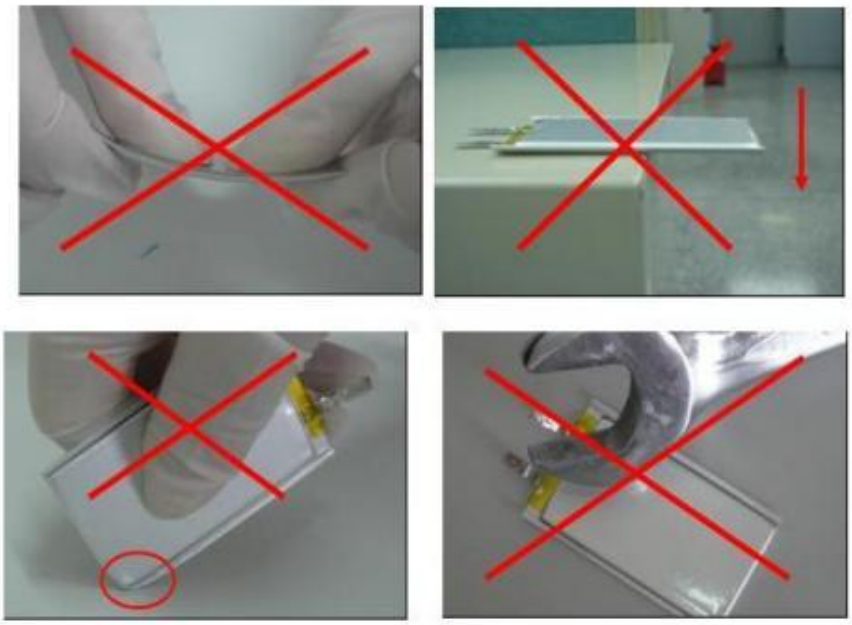

Short: Short terminal of the Cell is strictly prohibited. It may damage the Cell and result in safety accident.

Please use the battery according to the provisions as below ,Incorrect using of the battery may cause fire or expansion and destroy its performance

14.Warnings

14.1 Don't throw the cell in fire or heat it or store it in high temperature place ;

14.2 Don’t operate or use the cell under high temperature or next to the heating material. Don’t throw the cell in fire or heat it;

14.3. Don't fix the positive and negative of the cell reversely to the electrical equipment ;

14.4 Don't connect the positive and negative polarities by metallic conductor such as a metallic wire;

14.5 Don’t impact or scrape the surface of the cell by spiculate parts;

14.6 Don't stab it with a needle,beating,treading,fold or other way;

14.7 Don’t drop or fling the cell randomly;

14.8 Keep the cell sealed!(Don't open or deform folding edge,Don't bend or fold sealing edge,etc);

14.9 Don't unpack the battery or change its structure!;

14.10 Don't throw the cell in water,please keep it from humidity.

15.Attention

15.1 Please use the qualified equipment for charging and recharging the cell;

15.2 Don't use different type of cells supplied by different manufacturer together;

15.3 Don't charge the heating or modification cell;

15.4 Don't let the cell over-discharge.

16.1Reminding

16.1 Don't use the damaged cells (the sealing edge was damaged, the pack was damaged, the electrolyte leakage, etc.). If the cell heating when using, go far away from the cell, it may avoid unnecessary damage;

16.2 Theoretically, there is not flowing electrolyte in the cell, but if the leakage of electrolyte happen,or the electrolyte splash down to the skin, eyes or other parts of the body, wash with water and go to hospital immediately;

16.3 The cells supplied by Akyga battery had passed the QC before sales,If there is any abnormal problem such as unidentified heating,expansion and peculiar smell,please contact with us;

16.4 The Pack stored beyond half year should be charged to 3.7~3.9V/cell with constant current at 0.5C .