Specification Approval sheet

Lithium-ion Rechargeable Cell Battery

Model No.: LIR2025H

Specification		
Model No LIR2025H		

CONTENTS

Specification		
Model No LIR2025H		

1. Applicable Scope

This specs approval is applied only for the lithium-ion rechargeable cell battery produced by Akyga battery.

2. Type of Products

Type : Lithium-ion rechargeable cell battery
Model : LIR2025H

3. General Features

Long Cycle Life

Under the condition of standard discharge, the cycle life of the battery can be ⩾300 circles while with capacity ⩾80%

High Power Density

High power density makes the battery light in weight and small in dimension. It can be used in small devices.

Safe and Reliable

No floating metal lithium assures a safer usage.

Working voltage is up to 3.7V, approx. 3 times of the voltage of NI-MH or NI-CD, which reduces the quantity of the battery needed in certain application.

No memory effect

No memory effect assures a constant maximum application.

Low self-discharge rate : ⩽3%/month

Good Consistency

Good consistency is showed in battery capacity, internal resistance, discharge platform and capacity retention. A strict complete internal quality control is subject to the ISO9000 system in the company's production.

Specification		
Model No LIR2025H		

4. Spec Chart

LIR2025H
3.7
48±3
20.0（Max）
2.5 +02
2.50

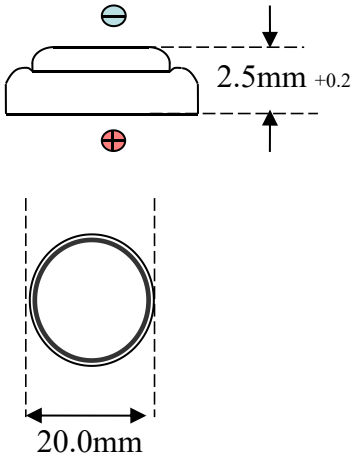

5. Battery Characteristics

5.1 Test Conditions

Temperature: 25℃

Relative Humidity: ≤75%±5

Atmosphere pressure: 1atm

5.2 Standard Charge/Discharge Characteristics

The test should be conducted under the condition below:

In a temperature of 25℃, CC charge 0.2CmA / voltage up to 4.20V; Then CV charge.Terminate charging when the charging current value is less than 0.05CmA.Rest for no more than 10 minutes, Discharge CC at 0.2CmA to 2.75V.

5.3

Fast Charge/Discharge : Temperature 25℃, CC charge at 1.0CmA to 4.20V; turn to CV charge; Terminate charging when the charging current value is less than 0.05CmA, rest for no more than 10 minutes, then at 1CmA CC discharge to 2.75V.

5.4

Temperature Characteristics : Working temperature range: -20℃—60℃。

5.5

Storage temperature: 20℃±1

Specification		

For charging/discharging characteristics at various currents see fig 1 or 2.

For discharging characteristics at various temperatures see fig 3 .

For Storage characteristics see fig 4.

For cycle life characteristics see fig 5.

Specification		

Fig. 1 Charging Characteristics at various currents

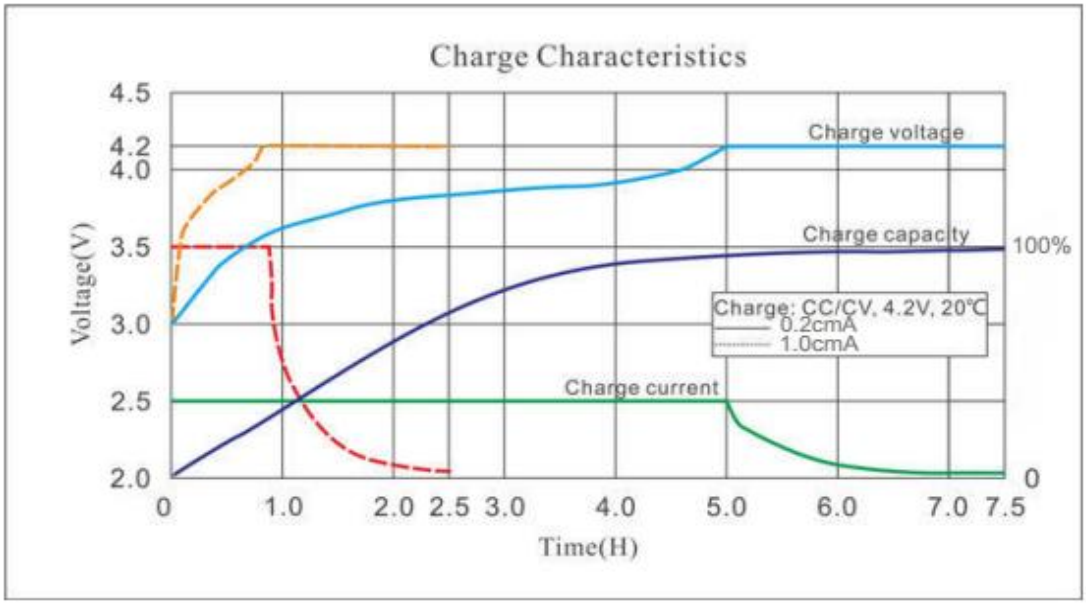

Fig. 2 Discharge Characteristics at various currents

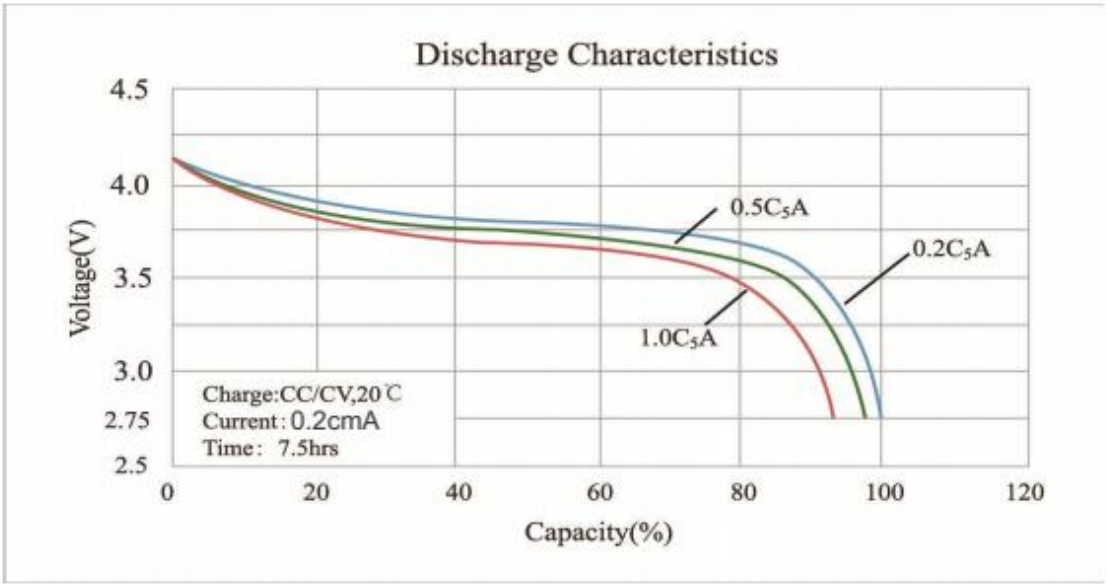

Specification		

Fig. 3 Discharging Characteristics at various Temperatures

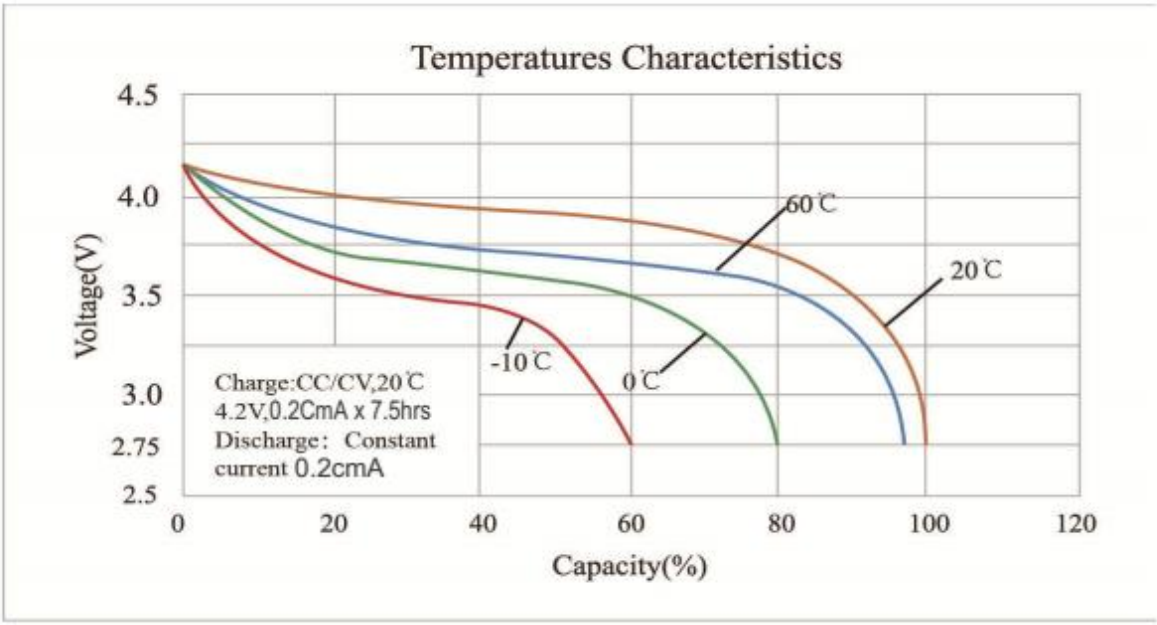

Fig. 4 Storage Characteristics

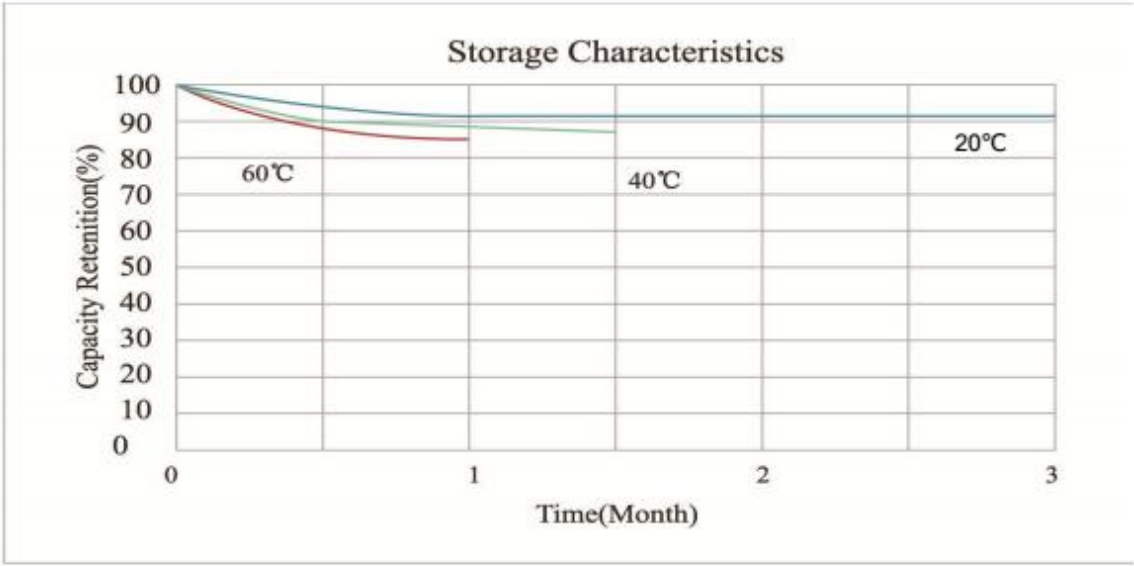

Specification		

Fig. 5 Cycle Life Chart

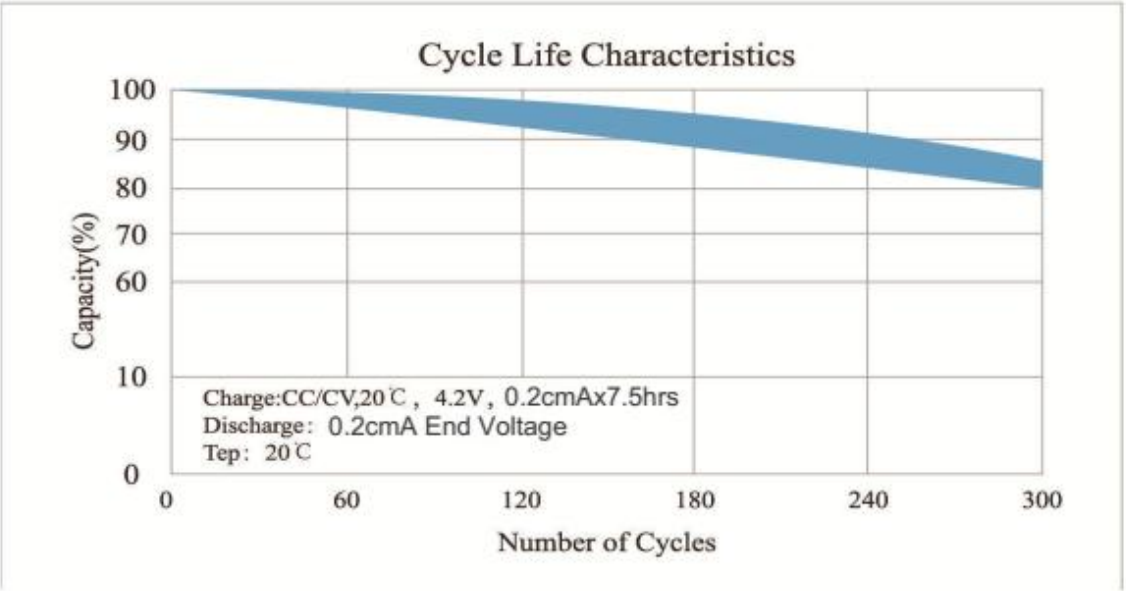

Specification		

6. Important Notes

Keep away from source of fire and/or heat.

Do not disassemble battery and/or battery pack.

Do not connect the positive and negative pole directly using conductive metal; avoid short circuit.

Do not put the battery into water or damp it.

Do not cut the battery.

Do not strike or needle the battery.

Charge the battery using specified chargers.

Do not solder the battery directly.

Observe the correct polarity (+/-)

Do not use the battery in un-specified application.

Do not mix the battery in usage with other types of battery.

Read the instruction manual carefully before use.

When the battery is used on load, it i recommended to design a charge/discharge protection circuit for the battery.

s

When the battery is stored and not used under room temperature for over 3 months, it needs to be recharged by the procedure below:

1) Discharge by CC mode at 0.2CmA to 2.75V, then rest for 5 minutes
2) Charge by CC mode at 0.2CmA to 4.20V limit, then change to CV charge mode,
3) Cut off the charge when the charging current is less than 0.05CmA.

◆ Quality Warrant : one year.

Specification		

7. Notes for Coin Battery Application

Charge Section ： It is recommended to use a charging management IC to control the charging current within 1C so as to ensure the safety of charge.

Protection Section: A protective circuit should be added to the PCM of the battery. It is recommended to use the Seiko IC (Number: S8261-G3J), with a discharge cut-off voltage at 3.0V.

Off-load current

Off-load current is a critical element in the electrical device. When in the condition where the device is off-loaded and there is no outer charging power and the battery should keep the IC in a working status, the off-load current of the device should be recorded. It is suggested to keep the off-load current within ≤5uA.

The application notes should be taken into consideration in design of a device. A well wired PCBA and a quality battery is an integral part to maintain the whole quality of the device.