Specification Approval Sheet

Name : Rechargeable Cylindricall Cell (Ni-MH)

Model : AKYGA NM-C-5S1P-3.5M

SPEC : 6.0V / 3500mAh

Specification Modification Records

Modification Time	Descriptions	Issued Date	Approved By
	Release 1	2023-08-29	

Content

Any copies are invalid without our company's approval

Specification Approval sheet

1 Scope

This specification is applied to the reference battery in this Specification and manufactured by Akyga battery

2 Product Specification

Table 1

No.	Item	General Parameter		Remark
1	Rated Capacity	Typical	3500mAh	Standard discharge（0.2C) after Standard charge
		Minimum	3500mAh	
2	Nominal Voltage	6V		Mean Operation Voltage
3	Voltage at end of Discharge	5V		Discharge Cut-off Voltage
4	Internal Impedance	≤200mΩ		Internal resistance measured at AC 1KHz after 50% charge The measure must uses the new batteries that within one week after shipment and cycles less than 5 times
5	Standard charge	350mA(0.1C) /16h		Ta=0~40℃
6	Standard discharge	Constant current 0.2C end voltage 5V （持续电流：0.2C 截止电压：5V）		Ta=0~50℃
7	Fast charge	700mA(0.2C)~1750mA(0.5C) With charge termination control		-△V=50mV/pack Timer cutoff=110%input capacity Temp. cutoff=40~45℃ Ambient temperature 0~40℃

Specification Approval sheet

Continuous the table 1

No.	Item	General Parameter	Remark
8	Fast discharge	Constant current 0.5C end voltage 5V	
9	Maximum Continuous Charge Current	0.5C	
10	Maximum Continuous Discharge Current	10.5A(3C)	
11	Operation Temperature Range	Charge : 0~40℃	65±20%R.H. Bare Cell
		Discharge : -20~50℃	
12	Storage Temperature Range	Less than 1 year: -20~25℃	65±20%R.H. at the shipment state
		less than 3 months: -20~30℃	
13	Final dimension	Diameter:≤28.0mm	
		Length :≤255 0mm	
14	Weight of Battery	Approx.385g	

3 Performance And Test Conditions

3.1 Standard Test Conditions

Test should be conducted with new batteries within one week after shipment from our factory and the cells shall not be cycled more than five times before the test. Unless otherwise specified, test and measurement shall be done under temperature of 25±2℃ and relative humidity of 45~85%. If it is judged that the test results are not affected by such conditions, the tests may be conducted at temperature 15~30℃ and humidity 25~85%RH.

3.2 Measuring Instrument or Apparatus

3.2.1 Dimension Measuring Instrument

The dimension measurement shall be implemented by instruments with equal or more precision scale of 0.01mm.

3.2.2 Voltmeter

Standard class specified in the national standard or more sensitive class having inner impedance more than 10kΩ/V

3.2.3 Ammeter

Standard class specified in the national standard or more sensitive class. Total external resistance including ammeter and wire is less than 0.01Ω.

3.2.4 Impedance Meter

Impedance shall be measured by a sinusoidal alternating current method(1kHz LCR meter).

3.3 Standard Charge\Discharge

3.3.1 Standard Charge ： Test procedure and its criteria are referred as follows:

0.1C =350mA

350 mA(0.1C)×16hrs

3.3.2 Standard Discharge

0.2C =700mA

Cells shall be discharged at a constant current of 0.2C to 5volts @ 25º ± 2C

3.3.3 If no otherwise specified, the rest time between Chare and Discharge amount to 30min.

3.4 Appearance

There shall be no such defect as flaw, crack, rust, leakage, which may adversely affect commercial value of battery.

3.5 Initial Performance Test

Table 2

Item	Test Method and Condition	Requirements
(1) Open-Circuit Voltage	The open-circuit voltage shall be measured within 1 hours after standard charge.	≥6.25V
(2) Internal impedance	Internal resistance measured at AC 1KHz after 50% charge.	≤200mΩ
(3) Minimal Rated Capacity	The capacity on 0.2C discharge till the voltage tapered to 5V shall be measured after rested for 30min then finish standard charge.	Discharge Capacity ≥3500mAh

3.6 Cycle Life and Leakage-Proof

Table 4

No.	Item	Criteria	Test Conditions
1	Cycle Life (0.2C)	≥500	IEC61951-2 ED3.0
2	Humidity	No leakage	Standard charged, stand for 14 days at 33±3℃ and 80±5% of relative humidity

4. Mechanical characteristics and Safety Test

Table 5 (Mechanical characteristics)

No.	Items	Test Method and Condition	Criteria
1	Free falling(drop)	Charge at 0.1C for 16hrs,and then leave for 24hrs,check battery before / after drop Height: 50 cm Thickness of wooden board: 30mm Direction is not specified Test for 3 times	△V<0.02V/cell △Ri<5%/cell
2	Low Temperature Discharge	Standard Charge, Storage:24hrs at 0±2℃ 0.2C discharge at 0±2℃	1.0V/cell Cut-off ⩾240min
3	Overcharge	0.1C charge for 48hr	No conspicuous deformation and/or leakage
4	Charge Retention	Standard charge Storage: 28 days Standard discharge (0.2C)	≥180min
5	External Short Circuit	After standard charge, short-circuit the cell at 20 ℃ ± 5 ℃ until the cell temperature returns to ambient temperature.(cross section of the wire or connector should be more than 0.75mm2)	No fire and no explosion

5. Handling of Cells

5.1 Prohibition short circuit

Never make short circuit cell. It generates very high current which causes heating of the cells and may cause electrolyte leakage, gassing or explosion that are very dangerous.

The LIP tabs may be easily short-circuited by putting them on conductive surface.

Such outer short circuit may lead to heat generation and damage of the cell.

An appropriate circuitry with PCM shall be employed to protect accidental short circuit of the battery pack.

6.Notice for Designing Battery Pack

6.1 Pack toughness

Battery pack should have sufficient strength and the cell inside should be protected from mechanical shocks

6.2 Cell fixing

The LIP cell should be fixed to the battery pack by its large surface area.

No cell movement in the battery pack should be allowed.

6.3 Inside design

No sharp edge components should be insides the pack containing the LIP cell.

6.4 Tab connection

Ultrasonic welding or spot welding is recommended for LIP tab connection method.

Battery pack should be designed that shear force are not applied to the LIP tabs.

If apply manual solder method to connect tab with PCM, below notice is very important to ensure battery performance:

- The solder iron should be temperature controlled and ESD safe;
- Soldering temperature should not exceed 350°C;
- Soldering time should not be longer than 3s;
- Soldering times should not exceed 5 times, Keep battery tab cold down before next time soldering;
- Directly heat cell body is strictly prohibited, Battery may be damaged by heat above approx. 90°C

6.5 For mishaps

Battery pack should be designed not to generate heat even when leakage occurs due to mishaps.

1) Isolate PCM (Protection Circuit Module) from leaked electrolyte as perfectly as possible.
2) Avoid narrow spacing between bare circuit patterns with different voltage.
   (Including around connector)

7. Notice for Assembling Battery Pack

Shocks, high temperature, or contacts of sharp edge components should not be allowed in battery pack assembling process.

8. Others

8.1.Cell connection

1) Direct soldering of wire leads or devices to the cell is strictly prohibited.
2) Lead tabs with pre-soldered wiring shall be spot welded to the cells.
   Direct soldering may cause damage of components, such as separator and insulator, by heat generation.

8.2.Prevention of short circuit within a battery pack

Enough insulation layers between wiring and the cells shall be used to maintain extra safety protection.

The battery pack shall be structured with no short circuit within the battery pack, which may cause generation of smoke or firing.

8.3.Prohibition of disassembly

1) Never disassemble the cells
   The disassembling may generate internal short circuit in the cell, which may cause gassing, firing, explosion, or other problems.
2) Electrolyte is harmful
   LIP battery should not have liquid from electrolyte flowing, but in case the electrolyte come into contact with the skin, or eyes, physicians shall flush the electrolyte immediately with fresh water and medical advice is to be sought.

8.4 Prohibition of dumping of cells into fire

Never incinerate nor dispose the cells in fire. These may cause explosion of the cells, which is very dangerous and is prohibited.

8.5 Prohibition of cells immersion into liquid such as water

The cells shall never be soaked with liquids such as water, seawater, drinks such as soft drinks, juices, coffee or others.

8.6 Battery cells replacement

The battery replacement shall be done only by either cells supplier or device supplier and never be done by the user.

8.7 Prohibition of use of damaged cells

The cells might be damaged during shipping by shock. If any abnormal features of the cells are found such as damages in a plastic envelop of the cell, deformation of the cell package, smelling of an electrolyte, an electrolyte leakage and others, the cells shall never be used any more.

The Cells with a smell of the electrolyte or a leakage shall be placed away from fire to avoid firing or explosion.

9. Storing the Batteries

The batteries should be stored at room temperature, charged to about 30% to 50% of capacity. We recommend that batteries be charged about once per half a year to prevent over discharge.

10. Other The Chemical Reaction

Because batteries utilize a chemical reaction, battery performance will deteriorate over time even if stored for a long period of time without being used. In addition, if the various usage conditions such as charge, discharge, ambient temperature, etc. are not maintained within the specified ranges the life expectancy of the battery may be shortened or the device in which the battery is used may be damaged by electrolyte leakage. If the batteries cannot maintain a charge for long periods of time, even when they are charged correctly, this may indicate it is time to change the battery.

11.Note:

Any other items which are not covered in this specification shall be agreed by customer and Akyga battery.

Specification Approval sheet

12.Assembly drawing

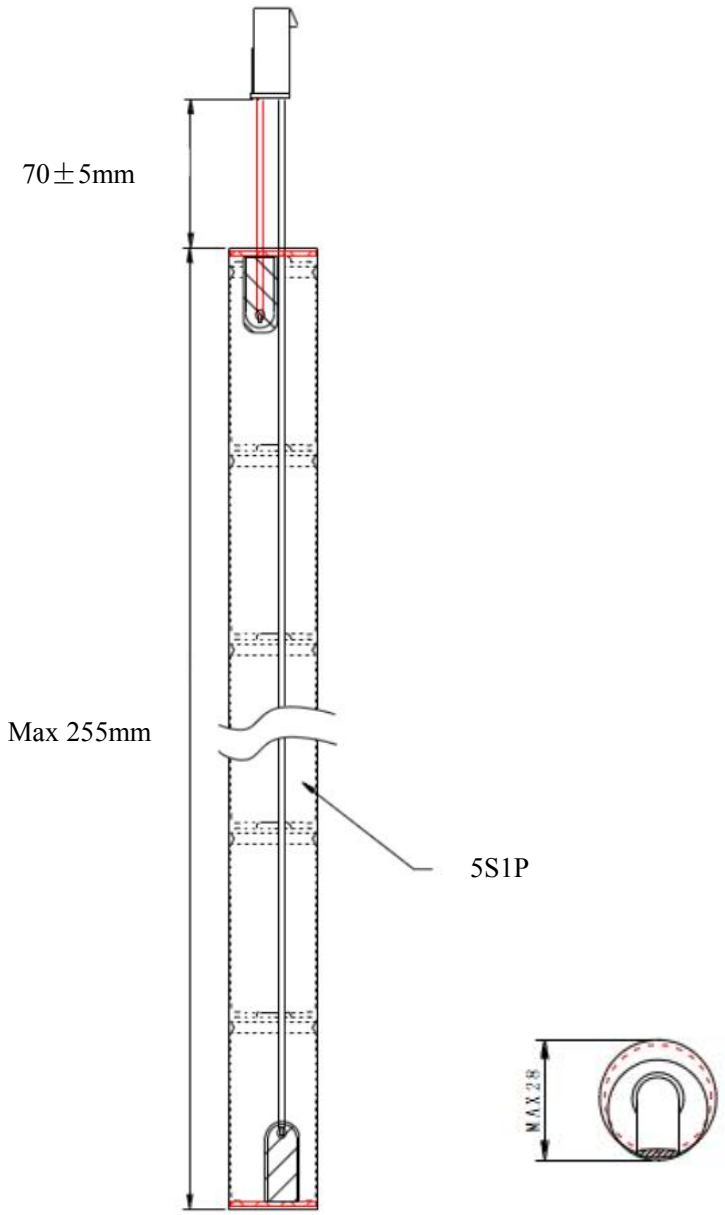

Length :	MAX : 255.0mm	Wire	UL1007 24AWG,Molex1053071202
Diameter :	MAX : 28.0mm	PVC	Green
Wire length	R=B=70mm±5mm		
		NM-C-5S1P-3.5M BATTERY DRAWING	