ER14505M-1S3P

Lithium-thionyl Chloride (Li-SOCl2) Battery

International size reference: *AA*

ELECTRICAL CHARACTERISTICS

(typical values for cells stored for one year or les s, at 25°C)

Nominal capacity *(At 3 mA, +25 C°, 2.0V cut off. The capacity restored by the cell varies according to current drain, temperature and cut off voltage.)*	*2.2Ah*
Nominal voltage	*3.6V*
Maximum continuous current (To get 50% of the nominal capacity at +25°C with 2.0V cut off. Higher currents possible, consult Akyga battery.)	*400mA*
Max. Pulse capability:	*1000mA*
Storage *(recommended)*	*+30°C max*
Operating temperature range (Operation at temperature different from ambient may lead to reduced capacit y and lower voltage plateau readings.)	*-60°C / +85°C*
Typical weight	Approx.*19g*

KEY FEATURES

- High and stable operating voltage
- Low self discharge rate(less than 1% after 1 year of storage at 25℃)
- Long storage life
- Stainless steel container(with low magnet)
- Widely operating temperature range
- Hermetic glass-to-metal sealing
- Non-flammable electrolyte

APPLICATION

- Utility metering
- Memory back-up
- Alarms and security devices
- Tollgate systems
- Military electronics
- Automotive electronics
- Professional electronics
- GPS tracking
- Real time clock etc.

DISCHARGE CHARACTERISTICS（+25℃）

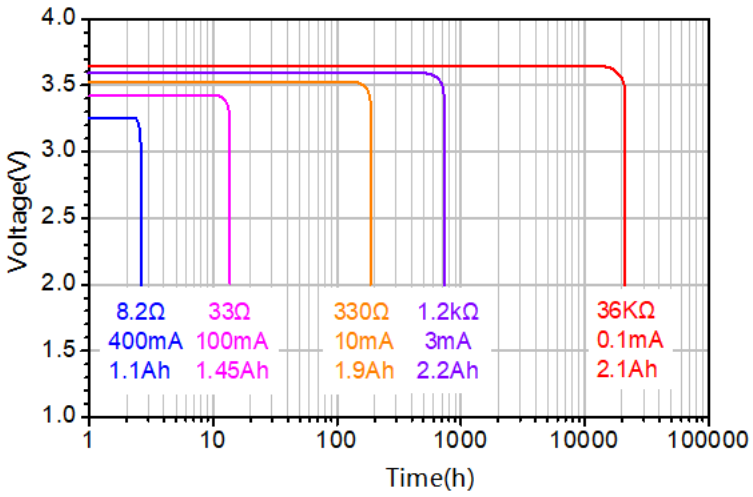

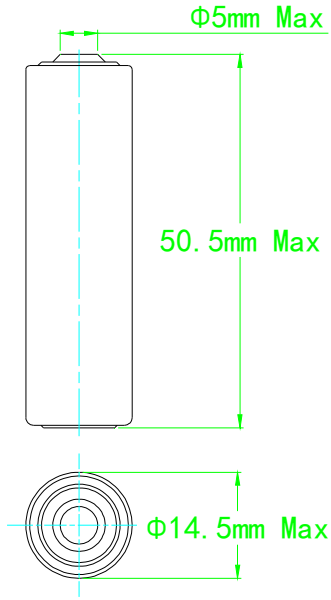

VOLTAGE VERSUS TEMPERATURE

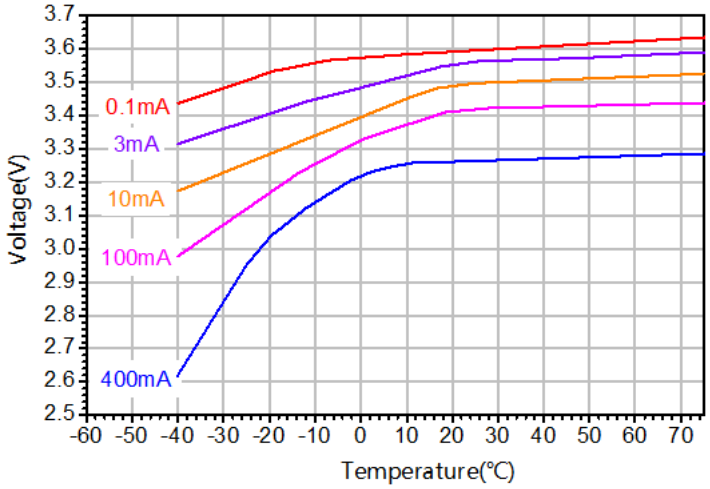

CAPACITY VERSUS CURRENT

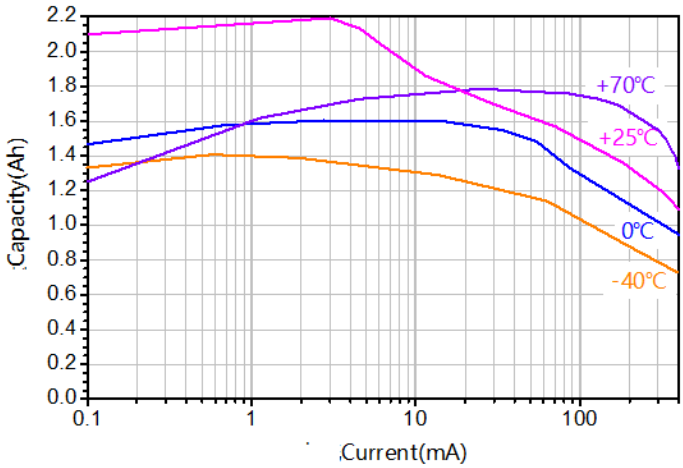

WARNING

- It is strictly forbidden to have the battery positive and negative short circuit, charging, discharging, heating over 100 ℃, remove, anatomy, or may cause explosion, combustion, internal acid leakage.
- Do not solder directly on the battery, should use wire or nickel sheet by pre spot welded .
- Can not mixed use with old and new battery or mixed use different kinds battery.
- Don't assemble the batteries from different manufacturers.
- Do not use the battery over the temperature range.
- Discharged battery should be buried deeply in the ground.

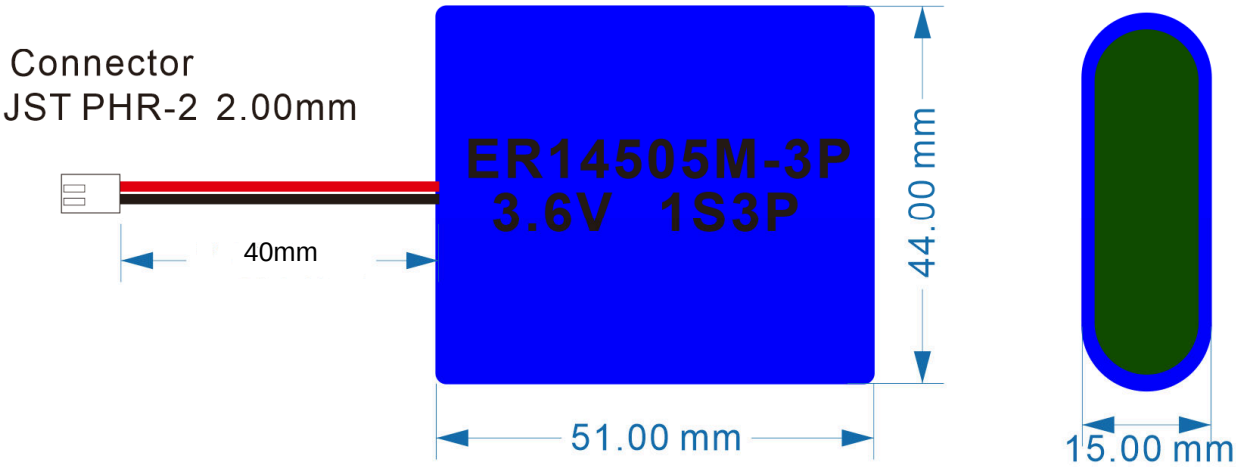
Connector
JST PHR-2 2.00mm
40mm
ER14505M-3P
3.6V 1S3P
44.00 mm
51.00 mm
15.00 mm