Specification Approval Sheet

Name : Battery Lithium-Polymer Battery

Model : AKYGA NP-FT1

SPEC : 3.7V / 600mAh

Specification Modification Records

Modification Time	Descriptions	Issued Date	Approved By
	Release 1	2022-09-29	

Content

Any copies are invalid without our company's approval

This specification describes the "NP-FT1" lithium ion battery pack for digital cameras manufactured by Akyga Battery

2、**MODEL：** NP-FT1

3、Nominal value

The serial number	project	specifications
1	Charging voltage	4.2V
2	Standard voltage	3.7V
3	Battery cell specifications	483436AL*1
4	Nominal capacity	≥600mAh（0.2Cdischarge）
5	Charging current	Standard charge：0.5C(300mA) Quick charge：1C(600mA)
6	The charging method	Charging method 0.5C (constant current) charge to 4.2V, then constant voltage 4.2V charge until charging current ≤0.01C (CC-CV)
7	Charging time	Standard charge：2 hours Quick charge：1 hour
8	Maximum charging current	1C
9	Maximum discharge current	2C continuous discharge mode (not recommended to work in this state for a long time)
10	Discharge cut-off voltage	2.85V (the action point of the protection plate is between 2.85V and 2.95V)
11	Working temperature	charging：0℃~45℃ discharge：-20℃~60℃
12	Storage temperature	-20℃~+45℃
13	The battery weight	14.5g ±2g
14	Battery shell material	ABS

4、Check and test battery performance

4.1 A visual inspection

Do not allow any electrical and appearance defects, such as cracks, scratches, glue, deformation, dirt, leakage, etc

4.2 Standard test environment

Unless otherwise stated, all tests in this standard book are performed under the following environmental conditions：

temperature：23℃±5℃

humidity：65±20%

4.3 Inflation performance

The serial number	project	Measurement methods and conditions	specifications
1	Standard charge	First charge with 0.2C constant current to 4.2V, then charge with constant voltage 4.2V (accuracy 4.20±0.05V) until the charging current is less than 0.01C	NO
2	Initial capacity	The capacity refers to the capacity discharged from 0.2C discharge to 2.85V cut-off voltage after standard charge	⩾600mAh
3	Cell cycle life	The cycle refers to one charging and discharging cycle (20℃, 0.5C charging and discharging current, 2.85V cut-off voltage). When the discharge capacity is reduced to 80% of the initial capacity, the number of completed cycles is defined as the cycle life of the cell	⩾300times
4	High and low temperature discharge characteristics	After standard charging, discharge at different temperatures (0.2C discharge cut-off voltage 3.0V), compare the discharge capacity (if charge and discharge at different temperatures, the interval is 3 hours), the temperature coefficient is the percentage value of the discharge capacity at this temperature and the discharge capacity at 20℃。	-10 ° C Discharge capacity ⩾70% Discharge capacity ⩾90% at 55 ° C

5	self-discharge	After standard charging, store at 25 ° C ± 2 ° C for 30 days, and then measure its capacity according to the method in Item 2.	The residual capacity＞90%
6	The battery internal resistance	After standard charging, the AC impedance at ACIKHZ was measured	200MΩ≤
7	The battery voltage	Shipment status	≥3.75V

4.4 Mechanical properties

The serial number	project	Measurement methods and conditions	specifications
1	Vibration test	The standard charged battery was vibrated along X, Y and Z directions for 90 minutes, with an amplitude of 1.6mm and a vibration frequency of 10HZ~55HZ, with a change of 1HZ per minute.	No leakage, capacity retention rate ≥ 90% (after standing the battery for 3 hours)
2	Drop test	Drop a standard charged battery from a height of 1 meter to the concrete floor six times	No explosion, fire, fluid leakage

4.5 Safety performance

The serial number	project	Measurement methods and conditions	specifications
1	Over charging performance	After being fully charged, the battery continues to be charged at a constant current of 0.5C for 24 hours	No explosion or fire
2	Over discharge performance	After the battery is discharged to 2.85V, continue to discharge with external 10**Ω** resistance for 24 hours	No explosion or fire
3	Short circuit performance	After the battery is fully charged, an external 0.1**Ω** resistor shortens its positive and negative terminals for 24 hours.	No explosion or fire
4	Reverse charging electrical performance	After the battery is fully charged, an external 5V DC power supply is connected to reverse charge the battery.	No explosion or fire

5、Environmental adaptability test

The environmental adaptability not mentioned above shall comply with the

corresponding provisions of GB/T18287-2000.

6、Lithium battery protection circuit board

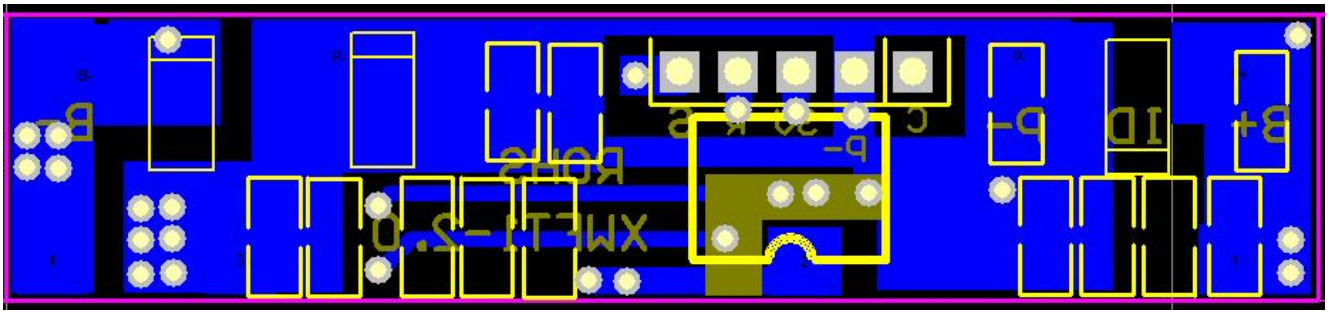

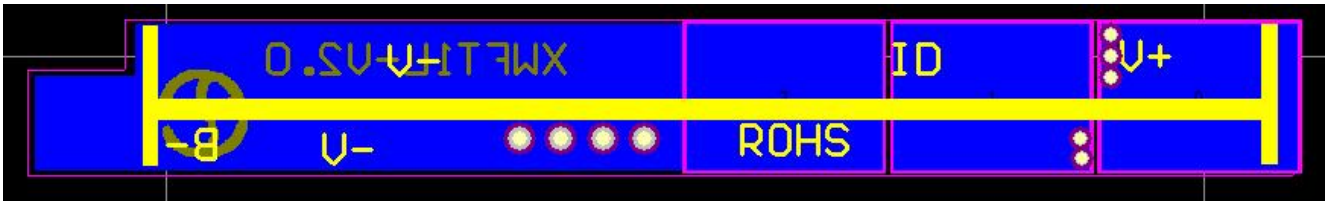

6.1 performance

The serial number	project	Measurement methods and conditions	specifications
1	Over charging performance	Test with standard qualified lithium ion rechargeable battery PCM protection circuit board tester at temperature of 0-45℃	The measured overcharge protection voltage is in the range of 4.425 ± 0.05V
2	Over discharge performance	Test with standard qualified lithium ion rechargeable battery PCM protection circuit board tester at temperature of -10-60℃	The measured overdischarge voltage is in the range of 2.9V ± 0.10V
3	The static flow consumption	Test with standard qualified lithium ion rechargeable battery PCM protection circuit board tester at temperature of -10-60℃	The internal current of the PCM protected circuit board is less than 4.3μA from any load or short circuit (static)
4	Overcurrent protection delay time	Test with standard qualified lithium ion rechargeable battery PCM protection circuit board tester at temperature of -10-60℃	The time required for the PCM circuit board to enter the protection state is not more than 9ms

			when the circuit board is overloaded
5	Overcurrent protection value (point)	4.2V DC virtual power supply is connected to the corresponding contact end of the electric cell on the panel, and then the load can be adjusted on the external positive and negative poles of the protection board.	The current that makes the protection plate just enter the overload protection
6	The internal resistance	Connect 4.2V DC virtual power to the corresponding contact end of the battery cell on the battery protection board, and then connect 10Ω load to the external positive and negative poles of the protection board.	The ratio of the measured voltage between the negative end of the contact end of the cell and the negative end of the external end of the protection board and the external load current value should be less than 65 mΩ

6.2 Electrical characteristics

Overcharge detection voltage Vcu：4.425V±0.05V

Overcharge recovery voltage：4.25V±0.05V

Overvoltage detection Vdd: 2.9V±0.10V

Overdischarge recovery voltage Vdh: 2.85±0.10V

Protection current：3.0A~8.0A

Consumable current during normal operation：TYP • 3.0uA

Consumable current when the standby server is in the standby state：TYP • 0.3uA

Short circuit protection time：TYP • 5uS

Conduct internal resistance during normal operation：TYP • 53 mΩ（**V=3.85**V）

Identification of resistance： 10K ±5%

7、Overall dimensions:

long（mm）	wide（mm）	height（mm）
41±0.2	30.5±0.2	5.3±0.2

8、Internal wiring diagram

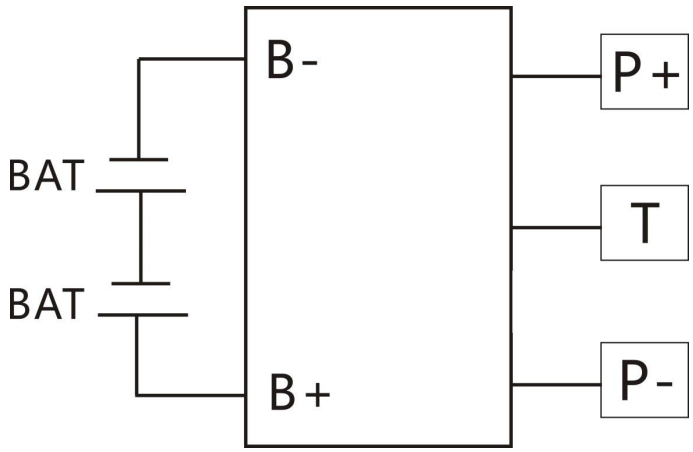

9、Warnings and precautions for battery use

To prevent battery leakage, heating and explosion, please take the following precautions:

Warning!

♠Do not immerse the battery in seawater or water. When not in use, keep the battery in a cool and dry environment.

♠Do not use or leave the battery near hot and high temperature sources, such as fire and heater.

♠Please use a special charger for lithium-ion batteries when charging.

♠Do not throw batteries into a fire or heater.

♠Do not short circuit the positive and negative terminals of the battery directly connected with metal.

♠Do not knock, throw or step on the battery.

♠Do not weld the battery directly or Pierce the battery with nails or other sharp objects.

Be careful！

♠Do not use or place the battery under high temperature (moxibustion under hot sunlight or in a very hot car). Otherwise, the battery may overheat, catch fire or fail to function, and its life may be shortened.

♠Do not use the device in a place with strong static electricity or magnetic field. Otherwise, battery safety protection devices may be damaged, resulting in potential dangers.

♠If the battery smells, becomes hot, discolored, deformed, or appears abnormal during use, storage, or charging, immediately remove the battery from the device or charger and stop using it.