Lithium-ion Button Cell Battery

Primary characteristics		
Parameter	**Value**	**Unit**
Nominal voltage	3.7	V
Rated capacity	40±5	mA

Battery dimensions

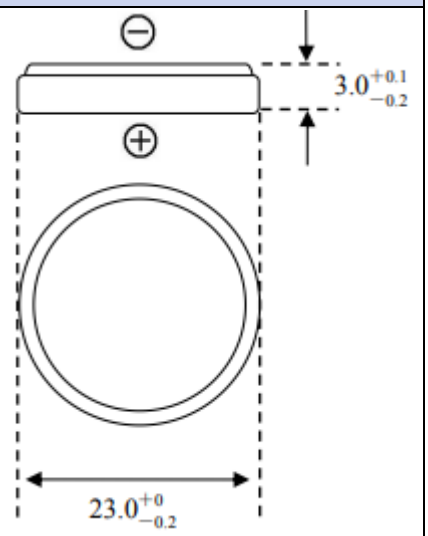

Scope

The purpose of this product specification is to provide technical information for the rechargeable Lithium-ion button battery LIR2330.
The test shall be conducted in strict accordance with the method specified in this specification.
If you have any objection to the test items or test methods, please contact Akyga Battery.

Specification table			
Parameter		**Value**	**Unit**
Model		LIR2330	
Nominal voltage		3.7	V
Rated capacity		40 ±5	mAh
Internal resistance		≤600	mΩ
Size	Diameter	23.0 -0.1	mm
	Height	3.0 +0.2	mm
Weight		2.7	g

Notes:
Internal resistance test standard: Temperature: 20°C ±1, CC charge 0.2CmA / voltage up to 4.2V; then CV charge. Terminate charging when the charging current value is less than 0.05CmA. Rest for 10 minutes, then test the battery by 1000Hz internal resistance tester.

Test conditions:
Temperature: 20°C ±1
Relative Humidity: ≤75% ±5
Atmosphere pressure: 1 atm
Standard Charge/Discharge Characteristics:
The test should be conducted under the condition below:
In a temperature of 20°C, CC charge 0.2CmA / voltage up to 4.2V; then CV charge. Terminate charging when the charging current value is less than 0.05CmA. Rest for 5 minutes, discharge CC at 0.2CmA to 2.75V.
Fast Charge/Discharge:
Temperature 20°C, CC charge at 1.0CmA to 4.2V; turn to CV charge; terminate charging when the charging current value is less than 0.05CmA, rest for 5 minutes, then at 1.0CmA CC discharge to 2.75V.
Temperature Characteristics:
Working temperature range: -20°C ~ 60°C
Storage temperature: 20°C ±5

Charging characteristics at various currents

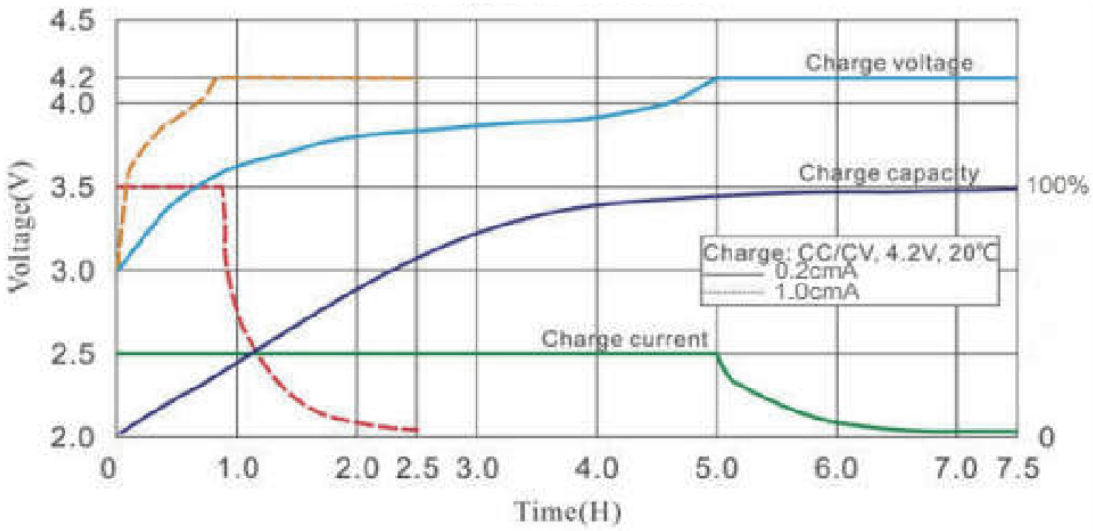

Discharge characteristics

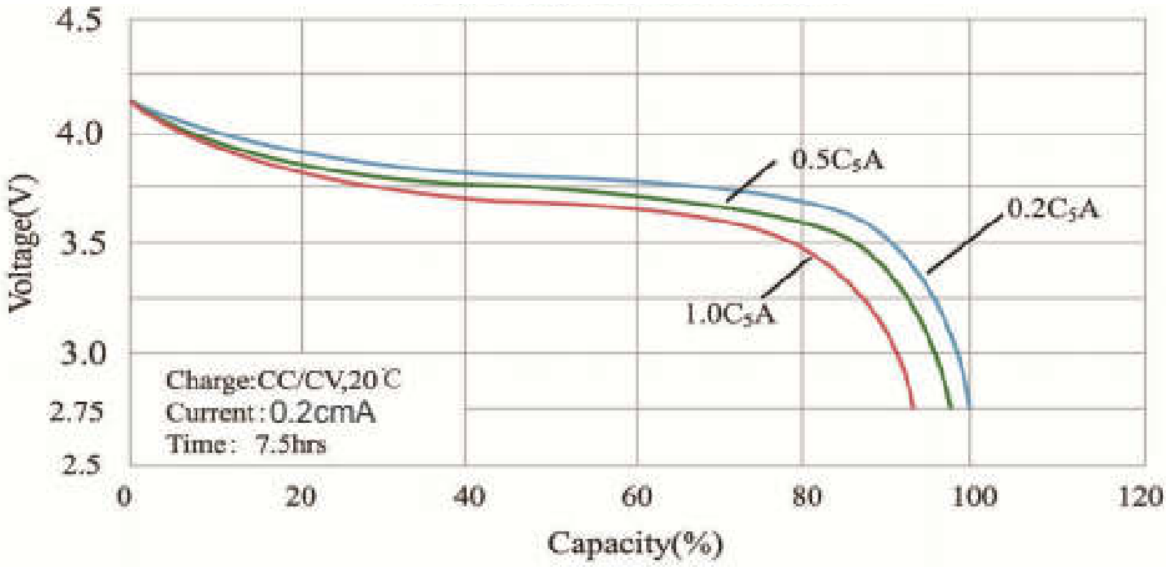

Discharge rate	0.2C	0.5C	1.0C
Effective capacity	100%	95%	90%

Discharging characteristics at various temperatures

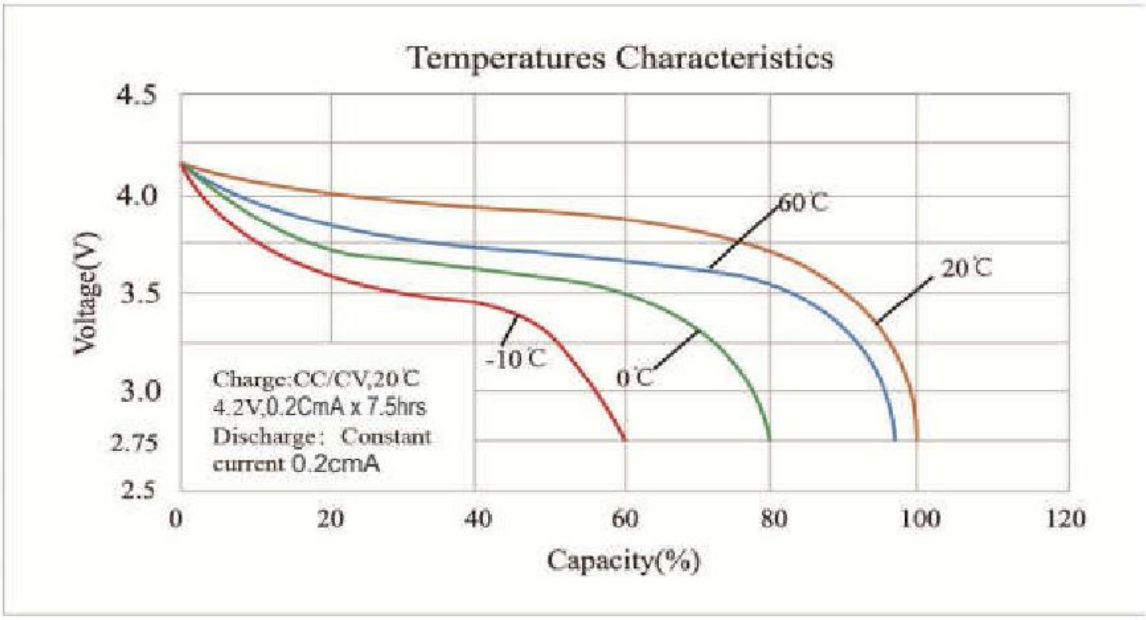

Storage characteristics

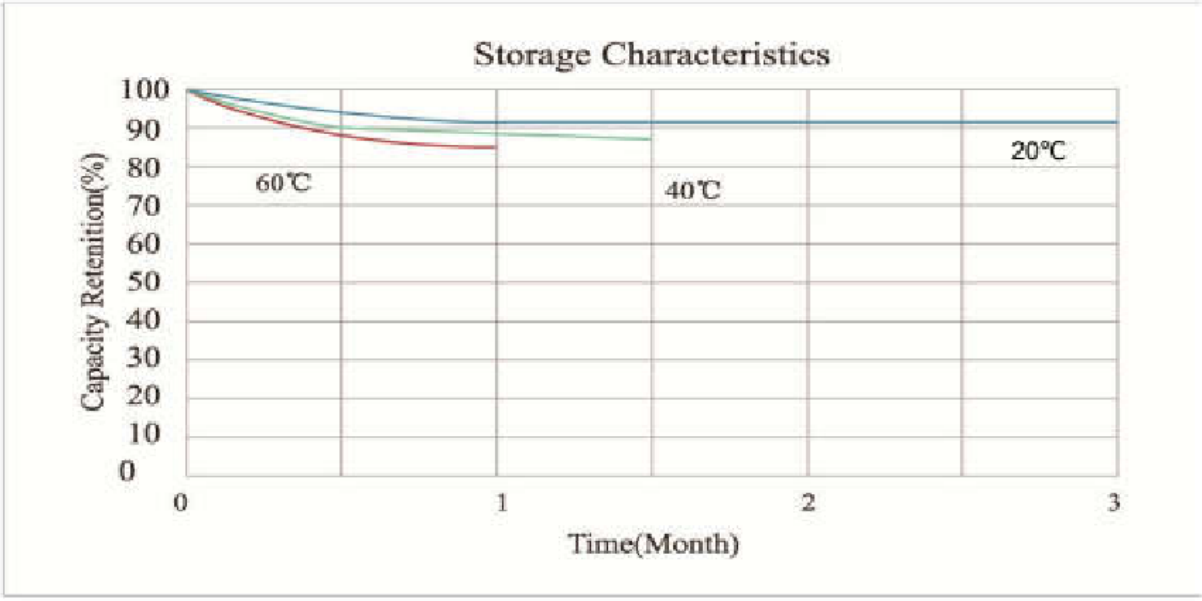

Cycle life characteristics
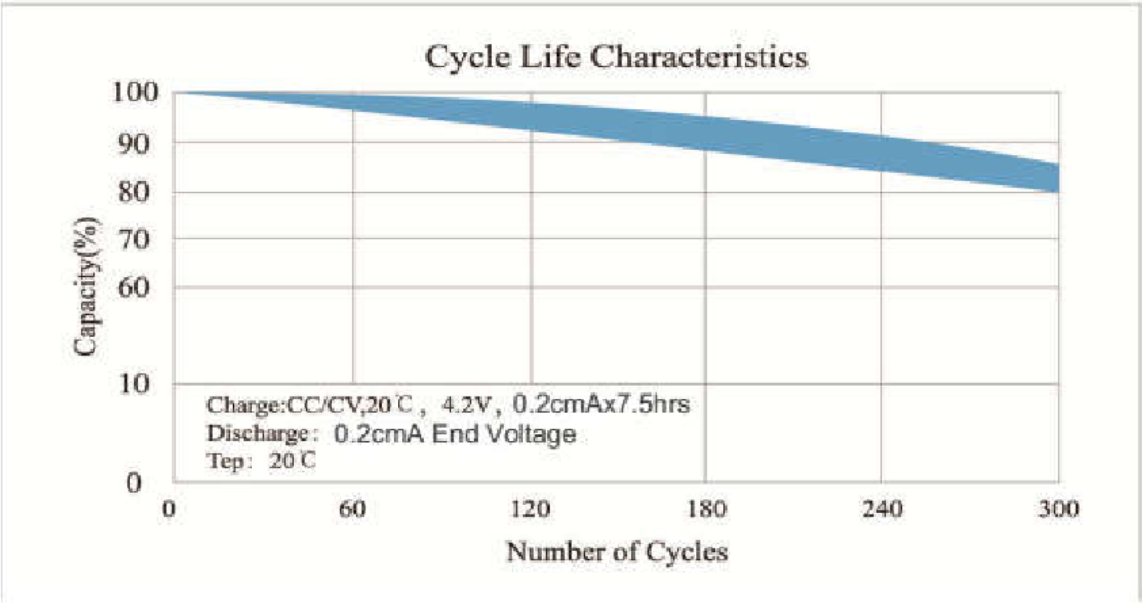

Important notes

Keep away from source of fire and/or heat.
Do not disassemble battery and/or battery pack.
Do not connect the positive and negative pole directly using conductive metal; avoid short circuit.
Do not put the battery into water or damp it.
Do not cut the battery.
Do not strike or needle the battery.
Charge the battery using specified chargers.
Do not solder the battery directly.
Observe the correct polarity (+/-).
Do not use the battery in un-specified application.
Do not mix the battery in usage with other types of battery.
Read the instruction manual carefully before use.
When the battery is used on load, it is recommended to design a charge/discharge protection circuit for the battery.
When the battery is stored and not used under room temperature for over 3 months, it needs to be recharged by the procedure below: Discharge by CC mode at 0.2CmA to 2.75V, then rest for 5 minutes, charge by CC mode at 0.2CmA to 4.20V limit, then change to CV charge mode. Cut off the charge when the charging current is less than 0.05CmA.

Charge Section: It is recommended to use a charging management IC to control the charging current within 1C so as to ensure the safety of charge.
Protection Section: A protective circuit should be added to the PCM of the battery. It is recommended to use the Seiko IC (Number: S8261-G3J), with a discharge cut-off voltage at 3.0V.
Off-load current
Off-load current is a critical element in the electrical device. When in a condition where the device is off-loaded and there is no external charging power while the battery has to keep the IC in a working status, the off-load current of the whole device should be measured. It is suggested to keep the off-load current of the whole device within ≤5uA.
The application notes should be taken into consideration in design of a device. A well-wired PCBA and a quality battery is an integral part to maintain the whole quality of the device.