Specification Approval Sheet

Name : **Nickel-Metal Hydride Rechargeable Battery Packs**

Model : AKYGA AA-6S1P-1.5M

SPEC : 7.2V / 1500mAh

Specification Modification Records

Modification Time	Descriptions	Issued Date	Approved By
	Release 1	2022-06-21	

Content

Any copies are invalid without our company's approval

At the positive electrode£º $NiOOH+H_2O+e \underset{charge}{\overset{diacharge}{\rightleftharpoons}} Ni(OH)_2 + OH^-$

At the negative electrode£º $MH+OH^- - e \underset{charge}{\overset{diacharge}{\rightleftharpoons}} M+H_2O$

Overall reaction£º $MH + NiOOH \underset{charge}{\overset{diacharge}{\rightleftharpoons}} Ni(OH)_2 + M$

During discharge, Protons (H^+) move from the negative of hydrogen-stored alloy. The free electrons flow into the positive through the external circuit, NiOOH of positive receive the electrons from the negative, and is deoxidize to Ni $(OH)_2$. Charge is just the opposition of discharge.

3. CELL TYPE AND RATINGS

Cell	Ni-MH Sealed Cylindrical Cell
Type	6×AA2000
Size type	AA2000
Rated capacity	2000mAh/0.2I_tA
Nominal cell voltage	7.2V
Weight of the single cell	190g
Diameter of the single cell	$14.5^{0}_{-0.7}$mm
Height of the single cell	$50.5^{0}_{-1.5}$mm

4. BEST EXPLOITATION CONDITIONS

Charge current	400mA (0.2C)
Charge control method	Time、TCO=45℃
Temperature range for charge	15℃～25℃
Humidity	45%~85%
Discharge current	400mA 0.2C
Max charge current	1C
Max discharge current	1C
Temperature range for discharge	15℃～25℃
Temperature range for storage	0℃～25℃

5. PERMISSION EXPLOITATION CONDITIONS

Low rate charge	
Current	200mA (0.1I_tA×16h)≤I＜800mA(0.4I_tA×3.0h)

Control method	Time, TCO=45℃
Ambient temperature	10℃～30℃
Humidity	45%~85%
High rate charge	
Current	800mA (0.4I_tA×3.0h)≤I≤2000mA(1I_tA×1.1h)
Control method	–ΔV=5mV/cell、Time、TCO=45℃, dT/dt=1℃/3min~2℃/3min
Ambient temperature	10℃～30℃
Humidity	45%~85%
Discharge	
Can be recycled continues discharge current	200mA（0.1I_tA）≤I≤4A（2I_tA）
Cut-off voltage	1.0V/cell（I≤1I_tA） 0.9V/cell（1I_tA＜I≤2I_tA）
Ambient temperature	-20℃～55℃（I≤0.2I_tA） -10℃～40℃（0.2I_tA＜I≤0.4I_tA） 0℃～30℃（0.4I_tA＜I≤1I_tA） 15℃～25℃(1I_tA＜I≤2I_tA)
Humidity	45%~85%
Storage	
Within a week	-20℃～35℃
Within six months	-20℃～25℃
Humidity	45%~85%

6. PERFORMANCE

6.1 TEST CONDITIONS

The test is carried out with new batteries (within one month after delivery). Before it is charged, the battery should be discharged at 0.2 I_tA to an end of voltage of 1.0V/cell under test conditions：

Temperature ： 20±5℃

Relative Humidity : 45% ~ 85%

Standard charge : 200mA (0.1 I_tA) × 16h

Standard discharge : 400mA (0.2 I_tA) to 1.0V/cell

6.2 TEST METHOD & PERFORMANCE

Test	Unit	Specification	Conditions	Remarks
Capacity	mAh	⩾2000	Standard charge/discharge	Up to 3 cycles are allowed
Shipment Voltage	V/cell	⩾7.2		AQL Ⅱ=0.65%
Open Circuit Voltage (OCV)	V/cell	⩾7.8	In 1h after standard charge	
Low rate Discharge (0.2 I_tA)	min	⩾300	Standard charge before discharge	Up to 3 cycles are allowed
Medium rate Discharge (1 I_tA)	min	⩾54	Standard charge Before discharge	Up to 3 cycles are allowed
High rate Discharge (2I_tA)	min	⩾25	Standard charge Before discharge	End Voltage is 0.9V/cell
Over charge	min	⩾300 No leakage No deformation	0.1 I_tA charge 48h, and rest for 1h-4h, then discharge at 0.2 I_tA	End Voltage is 1.0V/cell
Charge retention	mAh	⩾900	Standard charge; Storage of 28d; Standard discharge	Temp. 20℃±2℃
Cycle life	Cycle	⩾500	IEC61951-2 (7.4.1.1)	Refer to Note
Leakage		No leakage No deformation	Fully charge at 0.2I_tA, then storage of 14d	Temp. 20℃±5℃

Cycle life：

Prior to the endurance in cycles test, the cell shall be discharged at a constant current of 0.2 I_tA to a final voltage of 1.0 V/cell.

The following endurance test shall then be carried out, irrespective of cell designation, in an ambient temperature of 20 °C ± 5 °C. Precautions shall be taken to prevent the cell-case temperature from rising above 35 °C during the test, by providing a forced air draught if

necessary.

IEC61951-2 (7.4.1.1):

Cycle number	Charge	Stand in charged condition	Discharge
1	0.1I_tA for 16h	None	0.25I_tA for 2h20min [a]
2-48	0.25I_tA for 3h10min	Note	0.25I_tA for 2h20min [a]
49	0.25I_tA for 3h10min	Note	0.25I_tA to 1.0V
50	0.1I_tA for 16h	1h to 4h	0.20I_tA to 1.0V [b]

a. If the cell voltage drops below 1.0V, the discharge may be discontinued.
b. It is permissible to allow sufficient open-circuit rest time after the completion of discharge at cycle 50, so as to start cycle 51 at a convenient time. A similar procedure may be adopted at cycles 100, 150, 250, 300, 350, 400 and 450.

Cycles 1 to 50 shall be repeated until the discharge duration on any 50th cycle become less than 3 h. At this stage, a repeat capacity measurement as specified for cycle 50 shall be carried out.

The endurance test is considered complete when two such successive capacity cycles give a discharge duration of less than 3 h. The total number of cycles obtained when the test is completed shall be not less than 500.

6.3 Storage:

Prior to this test, the cell shall be discharged, in an ambient temperature of 20 °C ± 5 °C, at a constant current of 0,2 I_tA, to a final voltage of 1,0 V/cell. It shall then be charged of 0.1 I_tA for 16h. The cell shall then be stored on open circuit for 12 months.

After completion of the storage period, the cell shall be discharged in an ambient temperature of 20 °C ± 5 °C, at a constant current of 0,2 I_tA, to a final voltage of 1,0 V and five cycles are permitted for this test, the capacity for 0.2I_tA constant current shall be not less than 240 mins.

6.4 Vibration

The battery shall not cause damage to its performances when tested with the amplitude at 4mm (0.158 in) and the frequency at 1000Hz.

6.5 Drop test

The battery shall not cause damage to its performances when dropped to the wooden board at a height of 450mm (17.716 in).

6.6 Safety

6.6.1 Over-discharge device operation

Discharged for 24h with an load resistor (Load(mΩ)=1.2V×n×1000/2I_tA), but no leakage nor deformation.

6.6.2 Safety valve performance

Test method: the batteries are discharged to 0V at 0.2I_tA, then increase the current to 1I_tA and maintain an hour, leakage and deformation are allowed, but no disrupt and no burst.

6.6.3 Short circuit

Test method: charge at 0.2 I_tA for 7.5h, short-circuit directly between positive pole and negative pole for 1.0h, no disrupt, no burst, but leakage and deformation are allowed.

7. USE AND MAINTENANCE

7.1 Battery can be charged at constant current and constant power, charge current and charge control design can refer to the provisions of 5, don't control the battery with –ΔV for first 5min at the beginning of charge; and not advice charge the battery with constant voltage charger.

7.2 Too hot or too cool will reduce the capacity and life of the battery, please keep the battery at

15℃~25℃as much as possible.

7.3 Please refer to the provision of 5 to design discharge current and cut-off voltage, not advice to set discharge current more than the provision of 5.

7.4 Please contact with us when your charge/discharge current is higher than the provision of 5 or the combination quantity more than 15 pieces.

7.5 Short circuit, over-charge, over-discharge, reverse charge, mix using new battery with semi-used battery, excessive temperature or incinerate, strike or drop, incorrect charge method all can cause battery drop performance, seriously can cause battery to leakage, deform or explode.

7.6 Please store the battery in a cool and dry place; Charge battery before store it; long time storage can drop battery performance until lose effectiveness; The period of guaranteeing of our battery is 6 months after the day of purchase; please maintain the storing battery every 3 months; please charge/discharge the battery 3 times according to the provision of 5.

7.7 Battery can charge and discharge several hundreds times, but can lose effectiveness at last. When battery's work hours shortened obviously, please buy new battery.

8. SUGGESTION & ADVICE

8.1 If find any noise, excessive temperature or leakage from a battery, please stop its use.

8.2 When not using the battery, please disconnect it from the device.

8.3 Don't put the battery into water or fire.

8.4 Keep away from children. If swallowed, contact a physician at once.

8.5 This specification copyright belongs to Akyga Battery . copying before permitted. We reserve the right to modify this specification.

8.6 We'll not be held responsible if you use battery incorrectly.

8.8 If necessary, please contact Akyga Battery for detailed information.

Specification Approval sheet

TYPE：AA2000

Specifications(Unit cell)

Nominal voltage			1.2V	
Capacity (mAh)			$0.2C_5Ah$ [1]	
	Minimum		2000	
Diameter			$14.5^{0}_{-0.7}$mm	
Height			$50.5^{0}_{-1.5}$mm	
Weight[2]			About 12g	
Charge	Standard		$0.1I_tA$	
	Rapid		$1I_tA$	
	Trickle	Max.	$0.05I_tA$	
		Min.	$0.03I_tA$	
Ambient temperature	Charge	Standard [3]	10℃ ~30℃	50ºF~86ºF
		Rapid[4]	10℃ ~30℃	50ºF~86ºF
	Discharge[5]		-20 ℃ ~ 55℃	-4ºF~131ºF
	Storage		-20 ℃ ~25℃	-4ºF~78ºF

Appearance (Contain insulating packing**)**

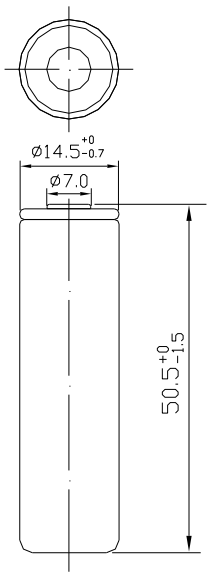

Typical Characte

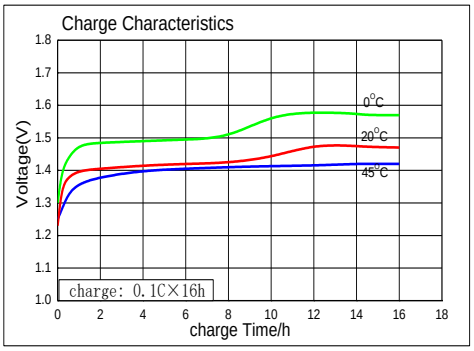

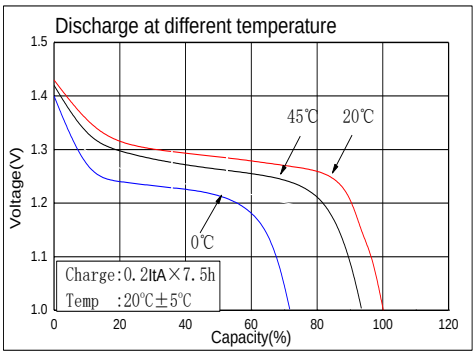

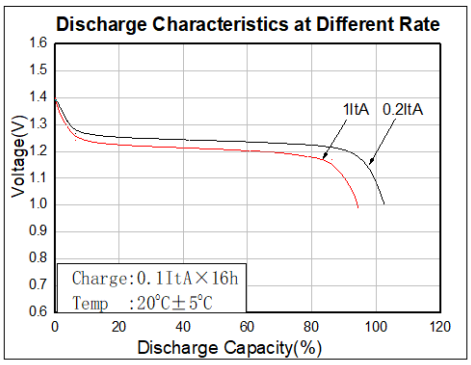

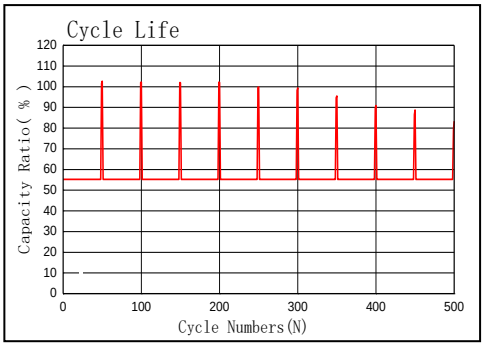

Note:

[1] Charge 16h at $0.1I_tA$, rest 1h, then discharge at $0.2I_tA$, end at 1.0V/cell, 20℃.

[2] Weight is for reference.

[3] Charge 16h at $0.1I_tA$.

[4] Charge 1.1h at $1I_tA$, dT/dt=1℃/3min ~2℃/3min, TCO=45℃，-ΔV=5 mV/cell,

[5] Discharge at $0.2I_tA$, end at 1.0V/cell.

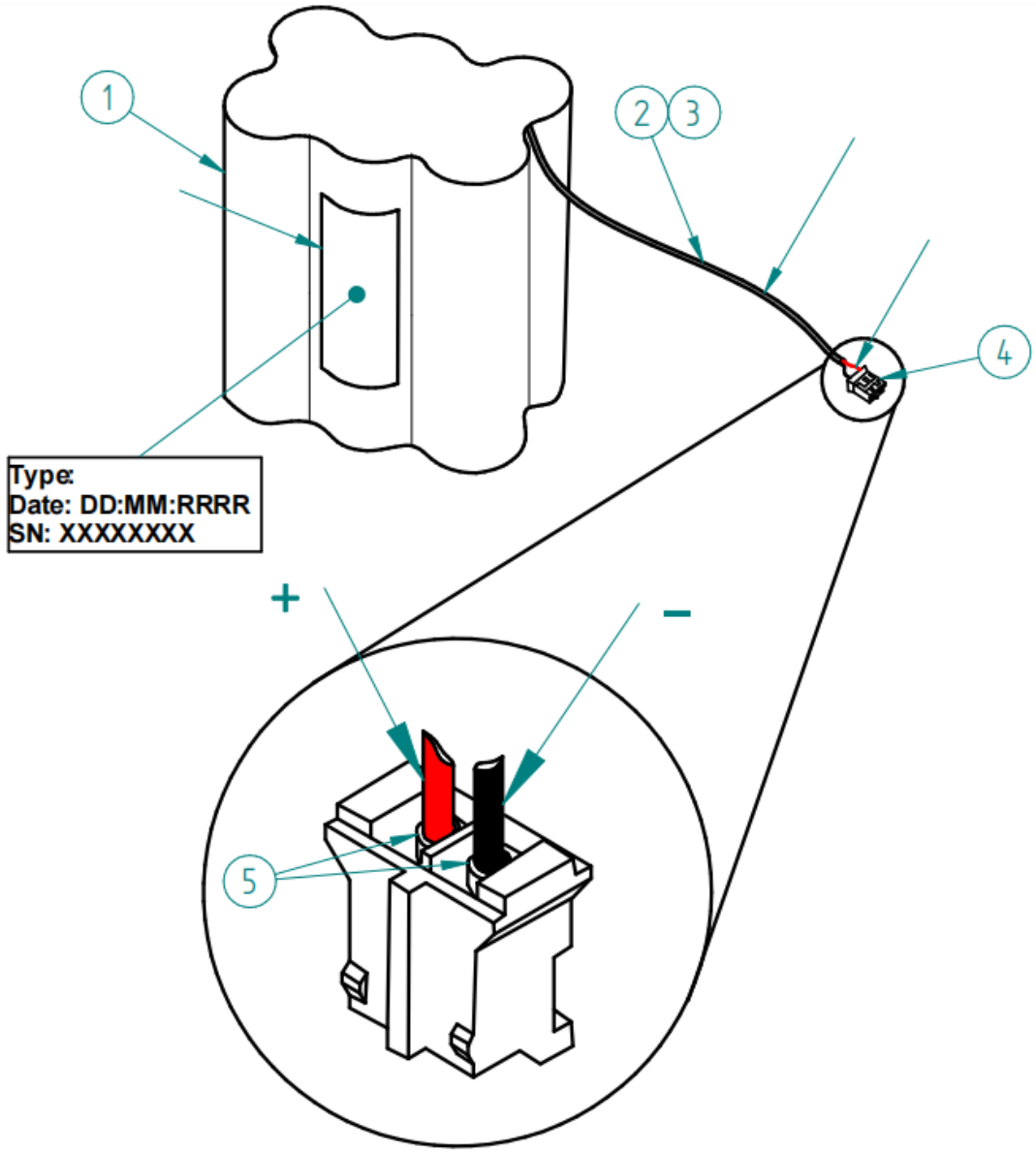

Battery size: 30X44X52mm