Product Specification

Customer Code	
Customer Part Number.	
Cell Model.	**LP1254**
Cell Part Number.	**201-00001**
Cell Voltage、Capacity	**3.7V 60mAh**
Document Number	

Prepared by	Checked by	Approved by

Customer Approval	Customer Signature/Date	Customer Company Stamp

Revision History

Revision	Description	Issued by	Approved by	Date
V1.0				2021.9.7

Contents

1. Scope

This document describes the specification of rechargeable Li-ion Cell which is designed and manufactured by **Akyga□Battery**

Reference Standard

GB/T 18287-2013， GB31241：

IEC/EN61960：

IEC/EN62133：

UL1642：

2.Cell specification

No.	Item	Parameters	
1	Cell model	**LP1254**	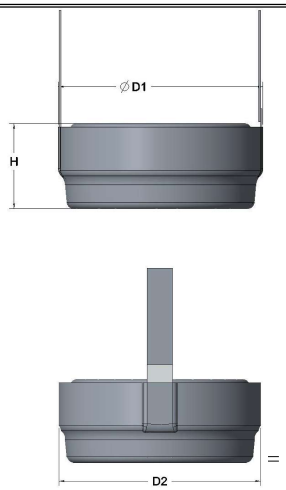
2	Minimum capacity 0.2C discharge current	**60mAh**	
3	Typical capacity 0.2C discharge current	**62mAh**	
4	Nominal voltage	**3.7V**	
5	Shipment voltage	**3.95V-4.1V**	
6	Shipment SOC Status	**≥85%**	
7	Charge ending voltage	**4.2V**	
8	Discharge ending voltage	**3.00V**	
9	Maximum Cell dimension	**D1: 12.4mm, D2:12.25mm, H1: 5.45mm**	
10	Protection IC	**N/A**	
11	Over current protection	**N/A**	
12	Short current protection	**N/A**	
13	Cell Impedance (V=**3.95-4.1V**)	**≤500mΩ**	
14	Maximum Cell weight	**1.2g**	
15	Max charge current	**120mA, 2.0C**	**15℃≤T≤45℃**
		30mA, 0.5C	**0℃≤T<15℃**
16	Max discharge current	**60mA, 1.0C**	**15℃≤T≤60℃**
		30mA, 0.5C	**0℃≤T<15℃**
		12mA, 0.2C	**-20℃≤T<0℃**
17	Operating temperature	**Charge 0-45℃ / Discharge : -20-60℃**	
18	Cycle life	**500 (25±3℃)** **After 500cycles charge/discharge, Cell can recover 80% of its initial capacity**	
19	Storage Method	**Within 6months**	**-20℃~+35℃, RH: 65±20%** **Recovery capacity >90%**
		Within 1 year	**-20℃~+30℃, RH: 65±20%** **Recovery capacity >85%**
20	Power Consumption	**0.08mV/h within one year**	
21	Other	**Meet the standards of UL1642, UN38.3, IEC62133, GB31241,REACH, ROHS**	

※1 Nominal capacity is measures by the discharge at 0.2C to 3.0V end voltage after fully charges according to specification at 23±2℃

※2 Discharged at high rate and high temperature（>45℃） frequently, Cell life will be shorten.

2.1 Cell Paint code

LP1254: Model Type

+:

0.222Wh: Nominal energy

-:

3.7V: Nominal voltage

MMYYDD: Year/Month

2.2 Cell drawing

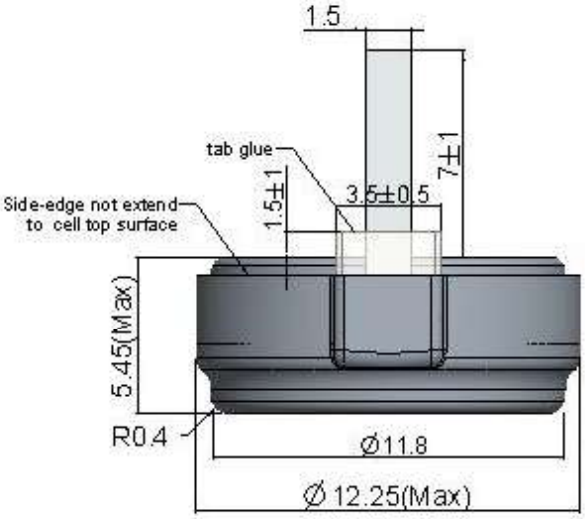

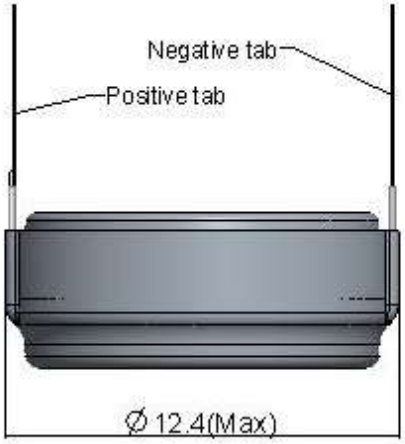

Note:
1. Model: 1254
2. Cell Maximum swelling size: <10%
(based on 500CL life test at RT)
3. Dimension without tolerance: ±0.2mm
4. Maximum outer force on the cell: <10N
5. Warning: Please don't press the cell with any sharp hard materials for safety consideration

2.3 Schematic diagram of Cell packaging

3.Environmental characteristics

No.	Test item	Test Method	Pass Criteria
1	**Charged Storage Characteristics**	Cell is fully charged by standard charge process. Cell idle at 25±3℃ for 28days. At 25±3℃, Cell is discharged Cell by 0.2C until 3.0V.	Discharge time≥4.25hrs

4. Safety Test

Akyga Battery Cell can meet several international safety standards. Below is part of safety tests which are referred to international standard.

No.	Test item	Test Method	Criteria
1	Constant Humidity and Temperature test	Cell is fully charged by standard charge process. Then, Cell is put into chamber with constant humidity (90~95%) and temperature (40±2°C) for 48hrs. After test, Cell idle for 2hrs at 25±3°C and discharge by 0.2C to 3.0V.	After test, Cell can discharge ≥3hrs No fire, No leakage, No explosion
2	Overcharge Test	Cell is fully charged by standard charge process. Then, the Cell is charged by 3.0C rate constant current and voltage to 4.6V for 7hrs.	No fire, No explosion
3	Over discharge Test	At 25±3°C, Cell is discharged by 0.2C until 3.0V. And then Cell is connected the load with 30Ω to discharge for 7hours.	No fire, No leakage, No explosion

4	Short test	Cell is fully charged by standard charge process. Then, Cell anode and cathode connected to ＜100mΩ load for 1hour.	No fire, No explosion The Temperature of the Cell surface not exceeded than 150℃
5	Projectile Test	Cell is fully charged by standard charge process. Cell is placed on the screen which is to be constructed by steel wire mesh. The screen is mounted above the burner. And eight-sided covered wire cage is to be placed over the Cell. Cell is to be heated and remain on the screen until it explodes or has been ignited or burned out.	No part of an exploding Cell shall penetrate the wire screen.
6	Drop Test	Cell is fully charged by standard charge process. Cell is free fall from a height of 1m on the cement floor, from X-axis、Y-axis positive and negative direction. Each direction is free fall 1 time.	No deformation, No fire, No explosion, No leakage

7	Crush test	Cell is fully charged by standard charge process. The Cell is to be crushed with its longitudinal axis parallel to the surfaces of crushing apparatus. The surfaces are to be bought in contact with Cell and the crushing is to be continued until an applied force of 13±1kN is reached. Once the maximum force has been obtained, it is to be released.	No fire, No explosion
8	Shock test	Cell is fully charged by standard charge process. Cell is secured to the testing machine by means of a rigid mount which will support all mounting surfaces of the Cell. The Cell is subjected to a total of two shocks of equal magnitude. The shocks are to be applied in each of two mutually perpendicular directions. For each shock the Cell is accelerated in such a manner that during the initial 3ms the minimum average acceleration is 75g. The peak acceleration shall be between 125 g and 175 g. Cell is tested at 20±5℃	No fire, No explosion,

5. Performance and Test Criteria

5.1 Standard Test Criteria

If test criteria is not defined, test should be done under the below standard test criteria.

Test Criteria	Parameters
Ambient Temperature	25±3℃
Relative Humidity	65±20%
Atmospheric pressure	86～106 KPa
Charge	Standard charge process
Discharge	Standard discharge process

5.2 Visual Inspection

No crack，no leakage

5.3 Measuring Instrument Standard

Instrument	Standard
Instrument to measure dimension	Precision scale : 0.01mm
Voltmeter	Internal impedance ＜ 10kΩ/V
Ammeter	Impedance of ammeter and wires ＜ 0.01Ω
Impedance meter	Impedance is measured by sinusoidal 1kHz AC current

5.4 Standard charge process

Cell pack is charged by 0.2C constant current at 25±3℃ until 4.2V. Then, Cell is charged by constant voltage until current drop to 0.02C.

5.5 Standard discharge process

Cell pack is discharged by 0.2C continuous current at 25±3℃ until the voltage drop to 3.0V.

5.6 Maximum charge current

Cell pack is charged by 2.0C constant current at 25±3℃ until 4.2V. Then, Cell pack is charged by constant voltage at 4.2V until current drop to 0.02C.

5.7 Maximum discharge current

Cell pack is discharged by 1.0C continuous current at 25±3℃ until the voltage drop to 3.0V.

5.8 Initial impedance

Cell pack is fully charged by standard charge process.

The impedance of fully charged Cell is tested by AC impedance tester at 1kHz. The initial impedance should be ≤500mΩ.

5.9 Initial capacity

Cell pack is fully charged by standard charge process and then Cell is fully discharged by standard discharge process.

The initial capacity is≥60mAh.

5.10 Cycle life

Test procedure

Step 1: Cell pack is charged by 1C constant current at 25±3℃ until 4.2V. Then, Cell is charged by constant voltage at 4.2V until current drop to 0.02C.

Step 2: Wait for 10mins

Step 3: Cell pack is discharged by 0.5Ccontinuous current at 25±3℃ until the voltage drop to 3.0V.

Step 4: Wait for 10mins

Step 5: Repeat step1 to step 4 until discharge time is less than 80% of initial Cell capacity

Cycle life should be more than or equal to 500cycles.

6. Usage of Cell

Akyga Battery **DO NOT** take responsibility if customer **DO NOT** follow the specification and below instruction using the Cell.

To have good performance of Cell, Cell should follow this Cell specification to use and storage.
Recommend to charge Cell every 6months using standard charge process.
To use the Cell safe, Cell is prohibited to disassemble, drop, heat, burn, soak, crush, shock, short circuit.
Enough insulation inside the customer's end product is required to avoid the short circuit of the Cell.
Cell should have enough space to install inside the customer's end product. Please use the maximum dimension of Cell pack after cycle life to reserve the space.
To protect the Cell, Cell should be installed in the customer's end product with strong mechanical strength. Any movement of the Cell in the end product should be avoided.
If Cell has any abnormal feature such as Cell cannot be charged and discharge, abnormal heat generate, deformation, smelling of electrolyte or leakage, Cell should be stopped to use immediately. Cell with smelling of electrolyte or leakage should be placed away from fire. Electrolyte is harmful. If electrolyte is contacted the skin or eyes, please flush electrolyte by purified water and consult doctor.

7. Warranty

Akyga Battery guarantees the Cell at good condition within **12months** when Cell is delivered from factory. Charge batteries when storage is over 6 months.

8. Others

8.1 Prohibition of disassembly

1) Never disassemble the Cells The disassembling may generate internal short circuit in the Cell, which may cause gassing, firing, explosion, or other problems.

2) Electrolyte is harmful LIP Cell should not have liquid from electrolyte flowing, but in case the electrolyte come into contact with the skin, or eyes, physicians shall flush the electrolyte immediately with fresh water and medical advice is to be sought.

8.2 Prohibition of dumping of Cell into fire

Never incinerate nor dispose the Cells in fire. These may cause explosion of the Cells, which is very Dangerous and is prohibited.

8.3 Prohibition of use of damaged Cell

The Cells might be damaged during shipping by shock. If any abnormal features of the Cells are found such as damages in a plastic envelop of the Cell, deformation of the Cell package, smelling of an electrolyte, an electrolyte leakage and others, the Cells shall never be used any more. The Cells with a smell of the electrolyte or a leakage shall be placed away from fire to avoid firing or explosion.

8.4 The following warning language is to be provided with the information packaged with the small Cells and batteries or equipment using them

- Keep batteries out of reach of children to avoid being swallowed, Swallowing may lead to burns, perforation of soft tissue, and death. Severe burns can occur within 2 h of ingestion. In case of ingestion of a Cell or Cell, seek medical assistance promptly.

- If children use the Cell, their guardians should explain the proper handling.

8.5 Any other items are not covered in the specification shall be agreed by both parties.