Specification Approval Sheet

Name：Polymer Lithium-Ion Battery

Model： AKYGA LHDA44590

SPEC：3.7V/ 5000mAh 5C

Number: A44590

Specification Modification Records

Modification Time	Descriptions	Issued Date	Approved By
	Release 1	2017-10-23	

Content

1.Scope:

This specification describes the Product Specification of chargeable Polymer Lithium-Ion Battery produced by AKYGA.

Any copies are invalid without our company's approval

2.Model :

3.Cell parameters Index:

3.1 Single cell parameters

No.	Item	Spec	Note
1	**Model Number**	A44590 / 5000mAh	
2	**Charge Limited Voltage**	4.2V	
3	**Nominal Voltage**	3.7V	Cell Voltage between 3.6V ~3.9V before shipping
4	**Nominal Capacity**	5000mAh@ 0.2C Discharge	Nominal Capacity refer to the capacity of 0.2C discharge with 2.75V cut-off voltage, after charging with standard method.
5	**Cycle Life**	500 Times	One cycle refer to one charge period and then one discharge period. Test condition: Charge: 0.2C to 4.2V Discharge: 0.2C to 2.75V The cycle life is the cycle times when the discharge capacity is about 80% of the rated capacity.
6	**Self-discharge**	Residual Capacity>90%	After standard charging, storied at 25°C±0.5°C for 30 days, then measure the capacity as item 4.
7	**Impedance**	Typical: 32mΩ	After standard charging, measure the internal resistance with AC1KHz
8	**Max. Charge Current**	2C	
9	**Max. Discharge Current**	5C	
10	**Discharge Cut-off Voltage**	2.75V	
11	**Operating Temperature**	Discharge:-20°C ~ +60°C Charge: 0 °C ~ +45°C	Cells must be storied at 3.6V-3.9V. During long period storage, cells should be maintained every 90 days. The method is to do a charge-discharge cycle with standard method, then charge to 3.7—3.9V.
12	**Storage Temperature**	-20 °C ~+45°C	
13	**Cell Weight**	Approx: 100g	
14	**Cell Dimension**	Length：90.5mm Max Width：45.5mm Max Thickness：10.9mm Max	Measured with weighting 300gf at 25°C±0.5°C Not including Tabs
15	**Connector type**		

3.2 Parameters of battery

No.	Items	Spec.	Notes
1	**Rated Capacity**	5000mAh	@ 0.2C mA discharging
2	**Nominal Voltage**	3. 7V	The average value of voltage during the discharge period (with standard charge and discharge).
3	**Assemblage Dimension**	Length：90.5mm Max Width：45.5m Max Thickness: 10.9mm Max	Measured with weighting 300gf at 25°C±0.5°C Not including battery drawing line.

Note: if the battery is in series, the internal resistance of PTC will change according to the temperature.

4.Electronic Characteristics test and inspection:

4.1 Standard testing environment

Unless special stated, tests should be done within one month of delivery and the charging-recharging times is less than 5 times. The following is test conditions: Ambient Temperature： 25℃±0.5℃

Ambient Humidity： 65 ±20%

4.2 The requirement of measure instrument

(1) The measure instrument is passed tested by qualified institute.
(2) The accuracy of the size instrument is not more than 0.01mm.
(3) The accuracy of multimeter is not less than 0.5%. while measure the voltage, the internal resistance mustn't less than 10KΩ.
(4) The principal of the internal resistance is 1KHz LCR, the accuracy is 0.2%.
(5) The internal resistance is changeable, it varies according to the temperature and the charging mode. And it is relevant to the PTC and the length and the Capacity of the drawing line.
(6) The current accuracy of the battery test system is more than ±0.1%, isobarically accuracy is ±0.5%, timer accuracy is less than ±0.1%.
(7) The accuracy of the temperature meter is less than ±0.5℃.

4.3 Visual inspection

Any visual inspection defects will affect the electronic characteristics, such as cracks, leakage, and flaw, are not inexistence.

4.4 Charge/Discharge Methods and Test Conditions

No.	Item	Testing Condition and Method	Note
1	**Charging Current**	Standard CC：0.2C Quick CC：0.5C	
2	**Standard Charging**	Constant Current Charging at 0.2C to 4.2V. Constant Voltage Charging at 4.2V to cut-off current≤0.05C	
3	**Quick Charging**	Constant Current Charging at 0.5C to 4.2V. Constant Voltage Charging at 4.2V to cut-off current≤0.05C	
4	**Standard Discharge**	Constant discharge at 0.2C to cut-off voltage of 2.75V.	
5	**Charging Time**	Standard charging time ：8 hours Quick charging time：2.5 hours	
6	**Temperature & Humidity**	Standard charging：0°C ~ 45 °C 45~85% RH Quick charging：10 °C ~ 45 °C45~85%RH Standard discharging：-20 °C ~ 60 °C 45~85% RH	
7	**Open Voltage**	3.6~3.9V (Before shipping)	

Notes： **The Max. voltage while charging is not more than 4.25V.The Max. protective voltage designed on PCB board should not more than 4.3V.**

4.5 Mechanical Characteristics

No.	Item	Testing Conditions and Method	Standard
1	**Vibration Test**	After standard charging, fixed the cell to vibration table and subjected to vibration cycling that the frequency is to be varied at the rate of 1Hz per minutes between 10Hz and 55Hz, the excursion of the vibration is 0.38mm. The cell shall be vibrated for 30 minutes for three axis of XYZ axes.	No leakage. Left Capacity≥90%, after 3 hours.
2	**Drop Test**	Drop the cell from 1meter height onto the concrete ground twice.	No explore, no fire and no leakage

4.6 Safety Test

No.	Item	Testing Conditions and Method	Standard
1	**Over-charge**	Charge is conducted for 8 hours while the invariable voltage is 4.30V.	No deformation and leakage
2	**Short-circuit**	The charged battery is short-circuited for 1 hour at 100 mΩ.	No explode or fire
3	**Heat shock**	Put the battery into the heat box, the temperature is rising to 120±2°C at the rate of (5±2°C /min and maintain for 10 minutes. Then cool down to room temperature at the rate of 5±2°C /min.	No explode or fire
4	**Humid and heat test**	Put the charged battery into box for 48 hours, the temperature is 40°C ±2°C and the relative humidity is 90%～95% .	No smoke or explode

4.7 High and low temperature test

No	Item	Testing Conditions and Method	Standard
1	**High Temperature**	Put the charged battery into the high temperature box for 2 hours at 55°C ±2°C. And discharge the battery at 0.5C current until the voltage is 2.75V.	Discharge 90 percent of the original capacity.
2	**Low Temperature**	Put the charged battery into the low temperature box for 16 hours～24 hours at -10°C ±2°C. And then discharge the battery at 0.1C until the voltage is 2.75V	Discharge more than 45 percent of the original capacity.

4.8 Electricity maintenance

No	Item	Testing Conditions and Method	Standard
1	**Electricity maintenance**	Rest the charge battery for 28 days at the ambient temperature of 25°C ±0.5°C. And then discharge the battery until the voltage is ended.	Discharge more than 85 percent of the original capacity.

5. Storage and others

5.1 Long Period Storage

If the cell has been stored for 3 month, it should be transfer to a **dry and cool** environment. Storage Voltage is between 3.6V and 3.9V and the storage conditions as Item 4.1.

5.2Any matters that this specification does not cover should be conferred between the customer and AKYGA

6.Drawing

6.1 Assembly diagram(not in scale)

Model：LHDA44590

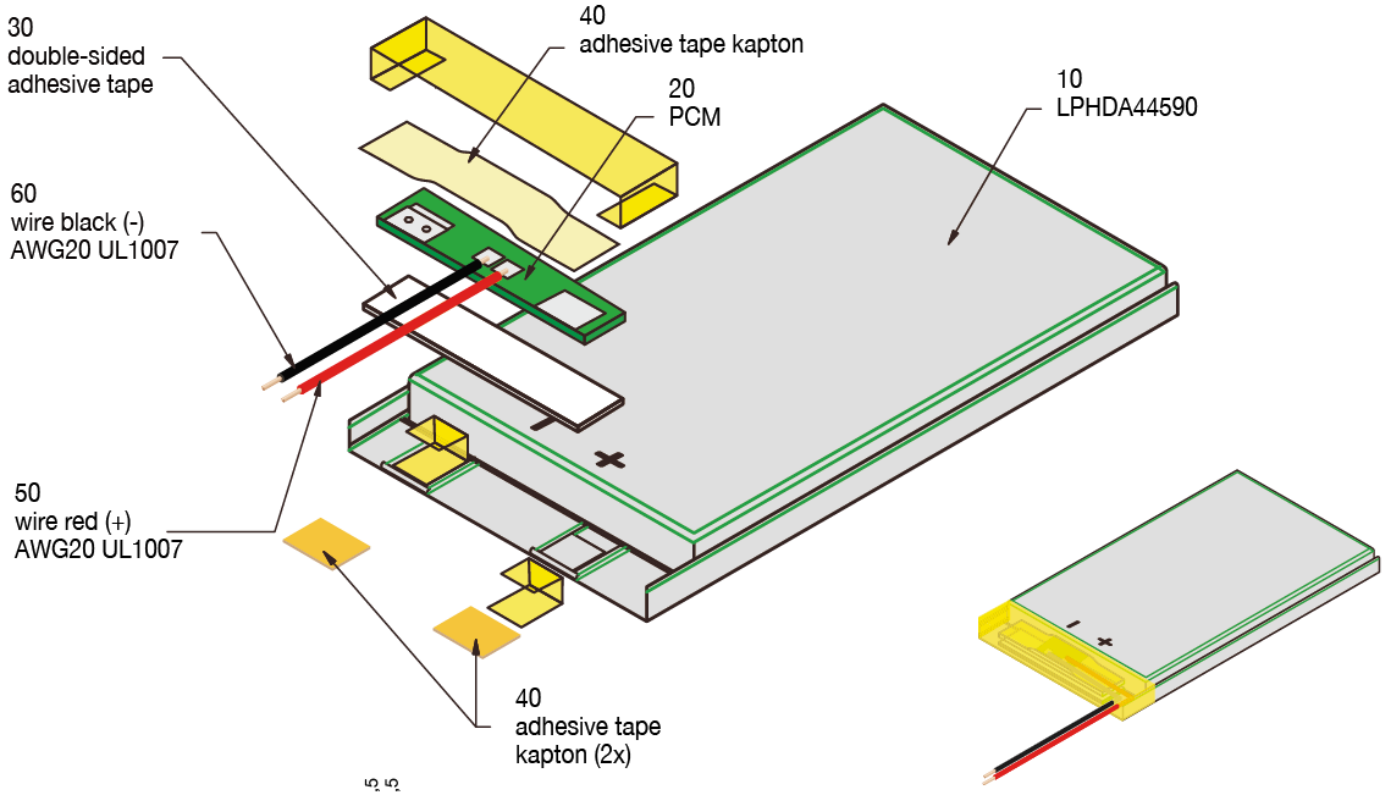

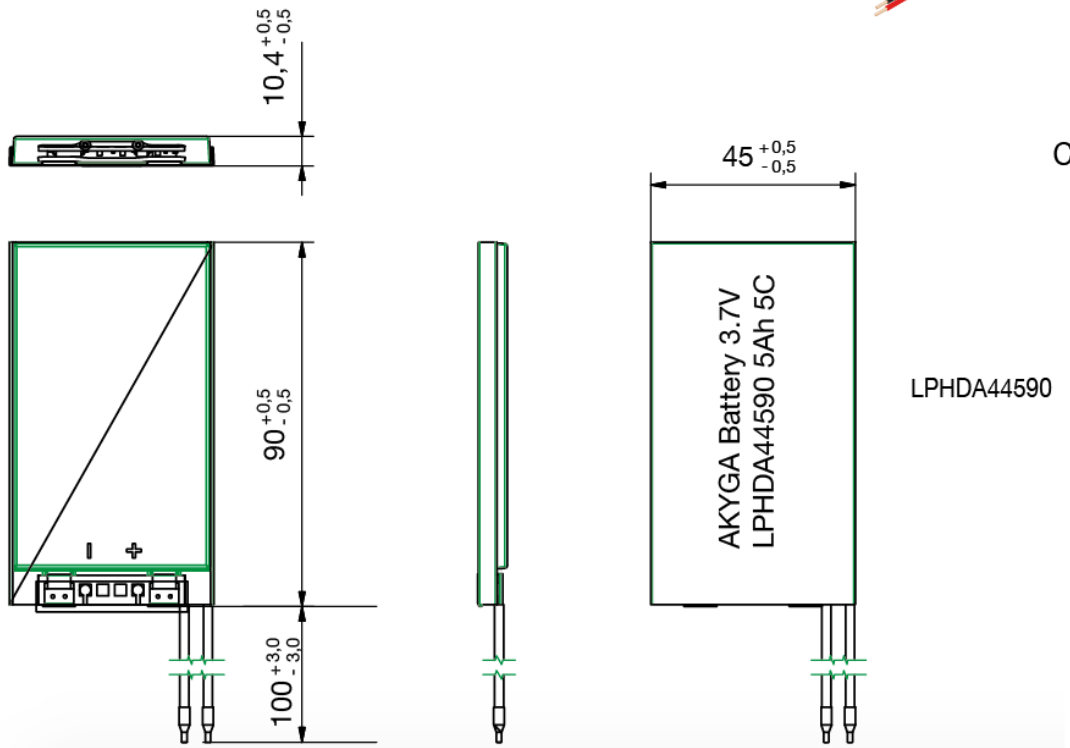

Circuit Diagram

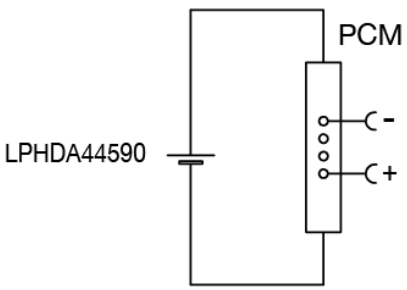

! Danger

- Strictly prohibits heat or throw cell into fire.
- Strictly prohibits throw and wet cell in liquid such as water, gasoline or drink etc.
- Strictly prohibits use leave cell close to fire or inside of a car where temperature may be above 60°C. Also do not charge / discharge in such conditions.
- Strictly prohibits put batteries in your pockets or a bag together with metal objects such as necklaces. Hairpins, coins, or screws. Do not store or transportation batteries with such objects.
- Strictly prohibits short circuit the (+) and (-) terminals with other metals.
- Do not place Cell in a device with the (+) and (-) in the wrong way around.
- Strictly prohibits pierce Cell with a sharp object such as a needle.
- Strictly prohibits disassemble or modify the cell.
- Strictly prohibits welding a cell directly.
- Do not use a Cell with serious scar or deformation.
- Thoroughly read the user's manual before use, inaccurate handling of lithium ion rechargeable cell may cause leakage, heat, smoke, an explosion, or fire, capacity decreasing.

! Warning

- Strictly prohibits put cell into a microwave oven, dryer, or high-pressure container.
- Strictly prohibits use cell with dry cells and other primary batteries, or new and old battery or batteries of a different package, type, or brand.
- Stop charging the Cell if charging is not completed within the specified time.
- Stop using the Cell if abnormal heat, odor, discoloration, deformation or abnormal condition is detected during use, charge, or storage.
- Keep away from fire immediately when leakage or foul odor is detected.
- If liquid leaks onto your skin or clothes, wash well with fresh water immediately.
- If liquid leaking from the Cell gets into your eyes, do not rub your eyes. Wash them well with clean edible oil and go to see a doctor immediately.

! Caution

- Before using the Cell, be sure to read the user's manual and cautions on handling thoroughly.
- Charging with specific charger according to product specification. Charge with CC/CV method. Strictly prohibits revered charging. Connect cell reverse will not charge the cel. At the same time, it will reduce the charge-discharge characteristics and safety characteristics, this will lead to product heat and leakage.
- Store batteries out of reach of children so that they are not accidentally swallowed.
- If younger children use the Cell, their guardians should explain the proper handling.
- Before using the Cell, be sure to read the user's manual and cautions on handling thoroughly.
- Batteries have life cycles. If the time that the Cell powers equipment becomes much shorter than usual, the Cell life is at an end. Replace the Cell with a new same one.
- When not using Cell for an extended period, remove it from the equipment and store in a place with low humidity and low temperature.
- While the Cell pack is charged, used and stored, keep it away from objects or materials with static electric charges.
- If the terminals of the Cell become dirty, wipe with a dry clothe before using the Cell.
- Storage the cells in storage temperature range as the specifications, After full discharged, we suggest that charging to 3.9~4.0V with no using for a long time.
- Do not exceed these ranges of the following temperature ranges.

Charge temperature range : 0 °C to 45 °C; Discharge temperature range : -20 °C to 60 °C.(When using equipment)

Handling Precaution and Guideline

For LIP (Lithium-Ion Polymer) Rechargeable Batteries

Preface

This document of 'Handling Precautions and Guideline LIP Rechargeable Batteries' shall be applied to the battery cells manufactured by AKYGA.

Note (1): The customer is requested to contact AKYGA in advance, if and when the customer needs other applications of operating conditions than those described in this document. Additional experimentation may be required to verify performance and safety under such condition.

Note (2): AKYGA will take no responsibility for any accident when the cell is used under other condition.

Note (3): AKYGA will inform, in a written form, the customer of improvement(s) regarding proper use and handling of the cell, if it is deemed necessary.

1. Charging 1.1Charging Current:

Charging current should be less than maximum charge current specified in the Specification Approval Sheet.

1.2 Charging Voltage:

Charging voltage should be less than the maximum **nominal voltage 4.2V**, and the charging voltage upper limited is **4.30V**(single pack).

1.3 Charging Temperature:

The cell should be charged within the range specified in this Specification Approval Sheet.

1.4 Notes:

Since charging with constant current or constant voltage, reverse charging is prohibited. In case of the cell is connected improperly, the cell cannot be charged. Simultaneously, the reverse charging may cause damaging to the cell which may lead to degradation of cell performance and damage the cell safety, and could cause heat generation or leakage.

2. Discharging Current:

The cell shall be discharged at less than the maximum discharge current specified in the Specification Approval Sheet. High discharging current may reduce the discharging capacity significantly or cause over-heat.

3. Discharging Temperature

Discharging Temperature should be within the range specified in this Specification Approval Sheet.

4.Over-Discharge

Over-discharging will cause cell low-performance and function loss. The cell would be in a over-discharged state by its self-discharge characteristic. In order to prevent over-discharging, the cell shall be charged periodically to maintain between 3.6V and 3.9V.

5. Protective Circuit Module

5.1 The cell / battery pack shall be with a PCM that can protect cell / battery pack properly. PCM shall have functions of

(1) Overcharging prevention
(2) Over-discharging prevention
(3) Over current prevention to maintain safety and prevent significant deterioration of cell performance. The over current can occur by external short circuit.

5.2 Overcharging Protection

Overcharging prevention function shall stop charging if any cell of the battery pack reaches **4.30V**.

5.3 Over-discharging protection

Over-discharging protection function shall monitor the voltage of every cell in the pack, and work to avoid further drop in the cell voltage of **2.75V or less**.

6. Storage

Cells should be stored in proper temperature specified in Specification Approval Sheet.

7. Appearance

It shall be free from any defects such as remarkable scratches, breaks, cracks, discoloration, leakage or deformation .

8. Notice⚠

8.1 Handling of cells:

- Avoid any short-circuit, it will caused the pole hot and lost electronic functions.
- Soft packing is very damaged by sharp edge parts such as needles and knives. Avoid cells touch with sharp edge part, when handling and storage.
- Beside the poles is the sealed edge. Don't bend or fold dealing edge, for it is a sensitive part.
- Don't open the folding edge on both sides of the cells.
- Don't bend the tabs, for the tabs are not so stubborn.
- Avoid mechanical shock to the cells.
- Don't put the cells into the heater, washing machine or high-voltage container.
- Don't use the charger without any safety guarantee, and recommend you use specified charger.
- You should immediately stop charging, as cell is overheating, delivery any smell, changed color, distortion etc.
- Before Children use batteries, adults should explain the usage first.
- Before use batteries, please read the handling guideline carefully and fully understand.
- Away from the static-electronic field, while using, charging and storing cells.
- Don't put the cells together with metal conductors such as chains, barrette, bolt into the pocket or stored them together.
- Don't use metal conductor to shortcut the positive and negative poles.
- Don't mis-assemble the positive pole with the negative one.

8.2 Notice for Designing Battery Pack

8.2.1 Package Design

- Battery pack should have sufficient strength and battery should be protected from mechanical shock.
- No sharp edge components should be inside the pack containing the battery.

8.2.2 PCM Design

- The overcharge threshold voltage should not be exceed 4.30V (single pack)
- The over-discharge threshold voltage should not be lower than 2.75V (single pack)

The PCM should have short protection built inside.

8.3 Notice for Assembling Battery Pack

8.3.2 Tab connection

- Ultrasonic welding or spot welding is recommended to connect battery with PCM or other parts.
- If apply manual solder method to connect tab with PCM, below notice is very important to ensure battery performance.

8.3.2.1 The solder iron should be temperature controlled and ESD safe.

8.3.2.2 Soldering temperature should not exceed 350℃.

8.3.2.3 Soldering time should not be longer than 3 seconds .

8.3.2.4 Keep battery tab cold down before next time soldering.

8.3.2.5 Directly heat cell body is strictly prohibited. **Battery should be damaged by heat above approx. 60℃**.

8.3.3 Cell fixing

- The battery should be fixed to the battery pack by its large surface area.
- No sharp edge at the assembling position.
- No cell movement in the battery pack should be allowed.

9.Others

9.1 The disassembling may generate internal shout circuit in the cell, which may cause gassing, firing, or other problem.

9.2 **Prohibition of dumping of cells into fire**

Never incinerate or dispose the cells in fire, for these may cause firing of the cells.

9.3 The cells should never be soaked with liquids such as water, drinks or oil.

9.4 Prohibit using the cells mixed with different manufactories. Prohibit using new cells mixed with old ones.

▲**Special Notice: If the cell isn't used for a long time, Please Keep the cells in half-charged state, which is keeping them unfully charged or incompletely discharged. Recharge the cells and use half of the power after 2-3months. Store the cells in cool and dry place. It will protect the cell from damage effectively and long-term.**

10. Statement

If our specifications material, product process or product control system has changed, the information will be transmitted to consumer by way of written with quality and reliability data.