TVS Diode Array

Primary characteristics			
Parameter	**Symbol**	**Value**	**Unit**
Peak repetitive reverse voltage	V_{RWM}	3.0~36	V
Reverse breakdown voltage	V_{BR}	4.5~6.5	V
Peak pulse power	P_{pk}	150	W

Features

- **SOT-23** case for easy automatic insertion.
- Pb-free and **RoHS** compliant
- Low clamping voltage
- Low leakage current
- Molding compound, UL flammability classification rating 94V-0
- Terminals: tin plated leads, solderable per MIL-STD-202, Method 208

Applications

- Cell phone handsets and accessories
- Microprocessor based equipment
- Portable instrumentation

Case dimensions

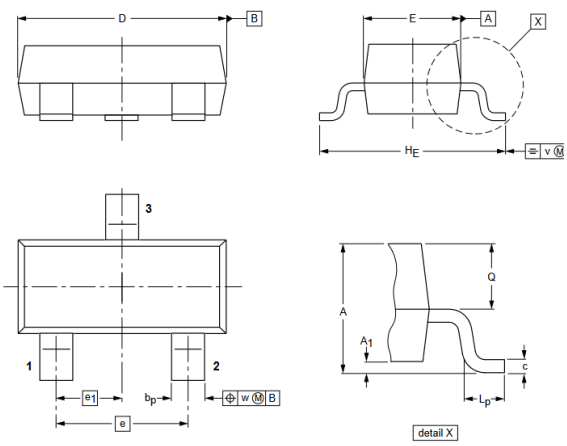

SOT-23 (TO-236AB)

Unit	A	A_1max	b_p	c	D	E	e	e_1	H_E	L_p	Q	v	w
mm	1.0 ±0.1	0.1	0.43 ±0.05	0.12 ±0.03	2.9 ±0.1	1.3 ±0.1	1.9	0.95	2.3 ±0.2	0.3 ±0.15	0.5 ±0.05	0.2	0.1

Pin configuration

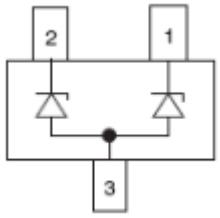

Maximum ratings (T_a = 25°C)			
Characteristic	**Symbol**	**Value**	**Unit**
Peak pulse power (t_p=8/20µs)	P_{PK}	150	W
ESD according to IEC61000-4-2 air discharge	V_{ESD}	±30	kV
ESD according to IEC61000-4-2 contact discharge			
Thermal characteristics			
Characteristic	**Symbol**	**Value**	**Unit**
Thermal resistance, junction to ambient	$R_{\theta JA}$	454	°C/W
Junction temperature	T_J	125	°C
Storage temperature range	T_{STG}	-55 ~ 150	°C

Electrical characteristics (T_a = 25°C)

SOT03C TVS for 3V lines

Characteristic	Test conditions	Symbol	Value			Unit
			Min.	Typ.	Max.	
Reverse stand-off voltage		V_{RWM}	-	-	3.0	V
Reverse breakdown voltage	I_R=1.0mA	V_{BR}	4.5	-	6.5	V
Reverse leaking current	V_R=3.0V	I_R	-	-	1.0	µA
Clamping voltage	I_{PP}=15A, t_p=8/20µs	V_C	-	-	12	V
Junction capacitance	V_R=0V, f=1.0MHz Pin 1 or 2 to Pin 3	C_J	-	-	200	pF

SOT05C TVS for 5V lines

Characteristic	Test conditions	Symbol	Value			Unit
			Min.	Typ.	Max.	
Reverse stand-off voltage		V_{RWM}	-	-	5.0	V
Reverse breakdown voltage	I_R=1.0mA	V_{BR}	6.0	-	8.0	V
Reverse leaking current	V_R=5.0V	I_R	-	-	1.0	µA
Clamping voltage	I_{PP}=12A, t_p=8/20µs	V_C	-	-	13	V
Junction capacitance	V_R=0V, f=1.0MHz Pin 1 or 2 to Pin 3	C_J	-	-	150	pF

SOT12C TVS for 12V lines

Characteristic	Test conditions	Symbol	Value			Unit
			Min.	Typ.	Max.	
Reverse stand-off voltage		V_{RWM}	-	-	12	V
Reverse breakdown voltage	I_R=1.0mA	V_{BR}	13.3	-	16	V
Reverse leaking current	V_R=12V	I_R	-	-	1.0	µA
Clamping voltage	I_{PP}=8.0A, t_p=8/20µs	V_C	-	-	20	V
Junction capacitance	V_R=0V, f=1.0MHz Pin 1 or 2 to Pin 3	C_J	-	-	100	pF

SOT15C TVS for 15V lines

Characteristic	Test conditions	Symbol	Value			Unit
			Min.	Typ.	Max.	
Reverse stand-off voltage		V_{RWM}	-	-	15	V
Reverse breakdown voltage	I_R=1.0mA	V_{BR}	16.7	-	20	V
Reverse leaking current	V_R=15V	I_R	-	-	1.0	µA
Clamping voltage	I_{PP}=6.0A, t_p=8/20µs	V_C	-	-	25	V
Junction capacitance	V_R=0V, f=1.0MHz Pin 1 or 2 to Pin 3	C_J	-	-	80	pF

Electrical characteristics (T_a = 25°C)

SOT24C TVS for 24V lines						
Characteristic	**Test conditions**	**Symbol**	**Value**			**Unit**
			Min.	**Typ.**	**Max.**	
Reverse stand-off voltage		V_{RWM}	-	-	24	V
Reverse breakdown voltage	I_R=1.0mA	V_{BR}	26.7	-	33	V
Reverse leaking current	V_R=24V	I_R	-	-	1.0	µA
Clamping voltage	I_{PP}=3.0A, t_p=8/20µs	V_C	-	-	50	V
Junction capacitance	V_R=0V, f=1.0MHz Pin 1 or 2 to Pin 3	C_J	-	-	70	pF

SOT36C TVS for 36V lines						
Characteristic	**Test conditions**	**Symbol**	**Value**			**Unit**
			Min.	**Typ.**	**Max.**	
Reverse stand-off voltage		V_{RWM}	-	-	36	V
Reverse breakdown voltage	I_R=1.0mA	V_{BR}	38	-	42	V
Reverse leaking current	V_R=36V	I_R	-	-	1.0	µA
Clamping voltage	I_{PP}=2.0A, t_p=8/20µs	V_C	-	-	80	V
Junction capacitance	V_R=0V, f=1.0MHz Pin 1 or 2 to Pin 3	C_J	-	-	30	pF

Characteristics curves

8/20µs pulse waveform according to IEC61000-4-5

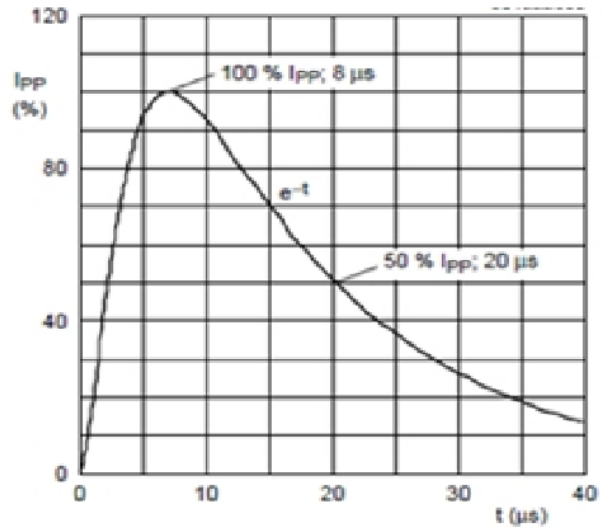

ESD pulse waveform according to IEC61000-4-2

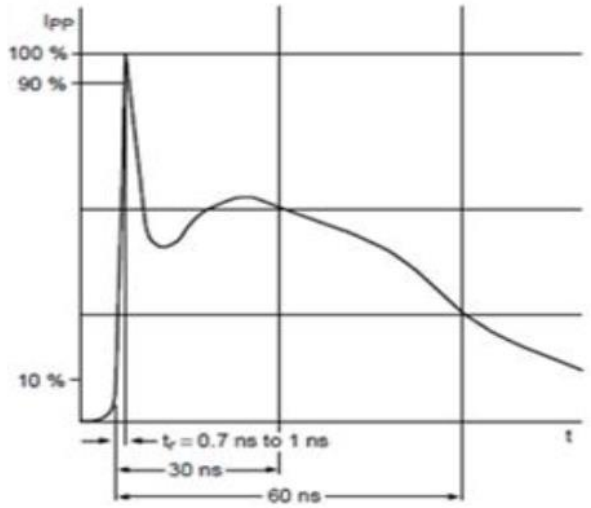

Suggested soldering pad layout

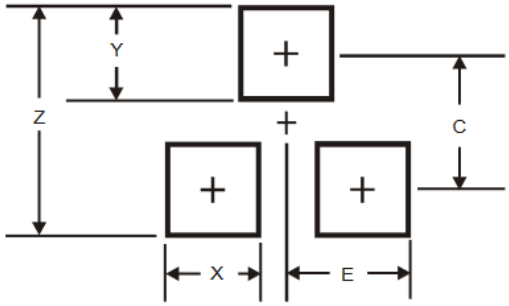

SOT-23 (TO-236AB)

Pad dimensions

Unit	Z	X	Y	C	E
mm	2.9	0.8	0.9	2.0	1.35

Ordering information

Part Number	Package	Shipping Quantity	Marking code
SOT03C	SOT-23	**3000 pcs / reel**	T03
SOT05C			T05
SOT12C			T12
SOT15C			T15
SOT24C			T24
SOT36C			T36

Disclaimer

Akyga semi reserves the right to make changes without notice to any product specification herein, to make corrections, modifications, enhancements or other changes. Akyga semi or anyone on its behalf assumes no responsibility or liability for any errors or inaccuracies. Data sheet specifications and its information contained are intended to provide a product description only. "Typical" parameters which may be included on Akyga semi data sheets and/ or specifications can and do vary in different applications and actual performance may vary over time. Akyga semi does not assume any liability arising out of the application or use of any product or circuit. Akyga semi products are not designed, intended or authorized for use in medical, life-saving implant or other applications intended for life-sustaining or other related applications where a failure or malfunction of component or circuitry may directly or indirectly cause injury or threaten a life without expressed written approval of Akyga semi. Customers using or selling Akyga semi components for use in such applications do so at their own risk and shall agree to fully indemnify Akyga semi and its subsidiaries harmless against all claims, damages and expenditures.