PNP Bipolar Transistor

Primary characteristics			
Symbol	**Parameter**	**Value**	**Unit**
I_C	Continuous collector current	600	mA
V_{CBO}	Collector-base voltage	60	V

Features

- **SOT-23** case for easy automatic insertion
- Pb-free and **RoHS** compliant
- Epitaxial planar die construction
- Complementary **NPN** type available (**MMBT2222**)

Case dimensions

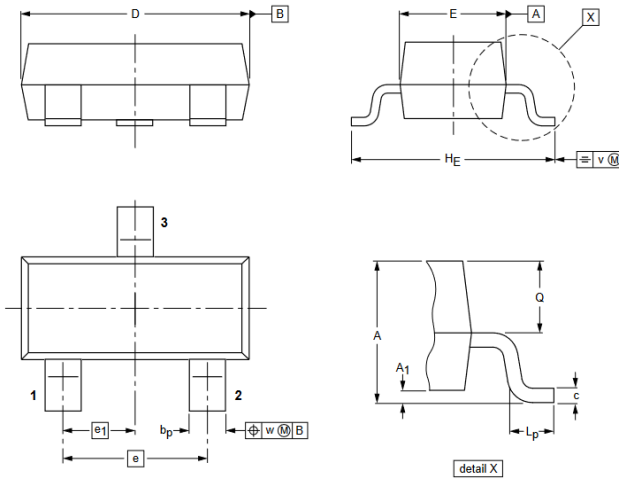

1 – Gate; 2 – Source; 3 - Drain

SOT-23 (TO-236AB)

Unit	A	A_1max	b_p	c	D	E	e	e_1	H_E	L_p	Q	v	w
mm	1.0 ±0.1	0.1	0.43 ±0.05	0.12 ±0.03	2.9 ±0.1	1.3 ±0.1	1.9	0.95	2.3 ±0.2	0.3 ±0.15	0.5 ±0.05	0.2	0.1

Absolute maximum ratings (T_A = 25°C unless otherwise noted)			
Characteristic	**Symbol**	**Value**	**Unit**
Collector-base voltage	V_{CBO}	60	V
Collector-emitter voltage	V_{CEO}	40	V
Emitter-base voltage	V_{EBO}	5.0	V
Continuous collector current	I_C	600	mA
Total power dissipation	P_D	250	mW
Operating junction temperature range	T_J, T_{STG}	-55 ~ 150	°C
Thermal resistance junction-ambient [2)]	$R_{\theta JA}$	500	°C/W

Electrical characteristics (T_A = 25°C)						
Characteristic	**Test condition**	**Symbol**	**Value**			**Unit**
			Min.	**Typ.**	**Max.**	
Collector-base breakdown voltage	I_E=0V, I_C=10µA	$V_{(BR)CBO}$	-	-	60	V
Collector-emitter breakdown voltage	I_C=10mA, I_B=0V	$V_{(BR)CEO}$	-	-	40	V
Emitter-base breakdown voltage	I_E=10µA, I_C=0	$V_{(BR)EBO}$	-	-	5.0	V
Collector cut-off current	V_{CB}=50V, I_E=0	I_{CBO}	-	-	20	nA
Base cut-off current	V_{EB}=3.0V, I_C=0	I_{EBO}	-	-	10	nA
DC current gain	V_{CE}=10V, I_C=150mA	$h_{FE(1)}$	100	-	300	
	V_{CE}=10V, I_C=100µA	$h_{FE(2)}$	52	-	-	
	V_{CE}=10V, I_C=500mA	$h_{FE(3)}$	32	-	-	
Collector-emitter saturation voltage	I_C=150mA, I_B=15mA	$V_{CE(sat)}$	-	-	400	mV
	I_C=500mA, I_B=50mA		-	-	670	
Base-emitter saturation voltage	I_C=150mA, I_B=15mA	$V_{BE(sat)}$	-	-	1.0	V
	I_C=500mA, I_B=50mA		-	-	1.2	

Switching characteristics (T_A = 25°C)						
Characteristic	**Test condition**	**Symbol**	**Value**			**Unit**
			Min.	**Typ.**	**Max.**	
Transition frequency	V_{CE}=20V, I_C=50mA, f=100MHz	f_T	200	-	-	MHz
Delay time	V_{CE}=30V, I_C=150mA, I_{B1}=15mA	t_d	-	-	10	Ns
Rise time		t_r	-	-	25	ns
Storage time	V_{CE}=6.0V, I_C=150mA, I_{B1}=I_{B2}=15mA	t_s	-	-	225	ns
Fall time		t_f	-	-	60	ns

Notes:
Pulse width t_p≤300µs; duty cycle ≤2.0%

Typical characteristics

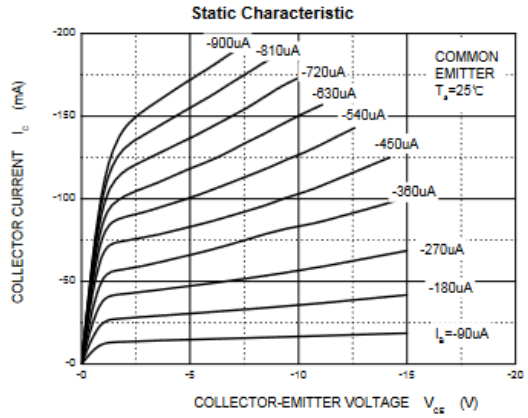

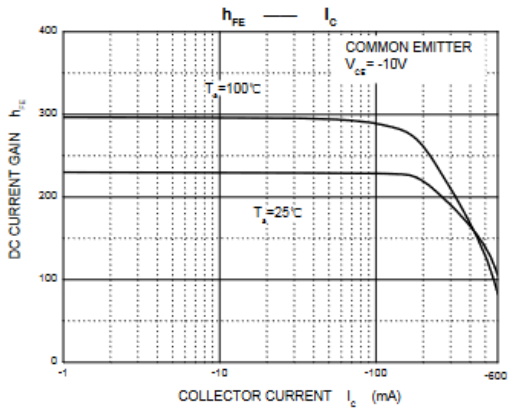

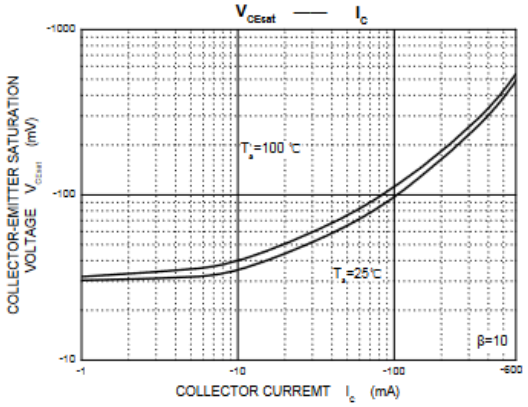

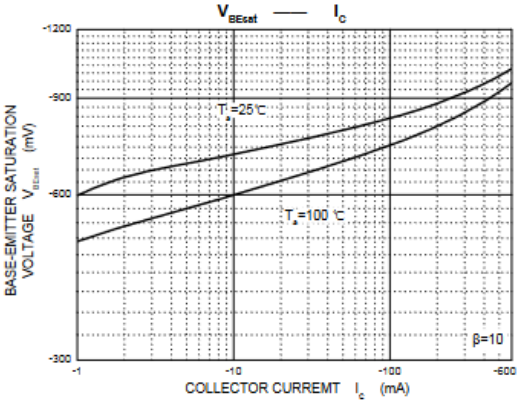

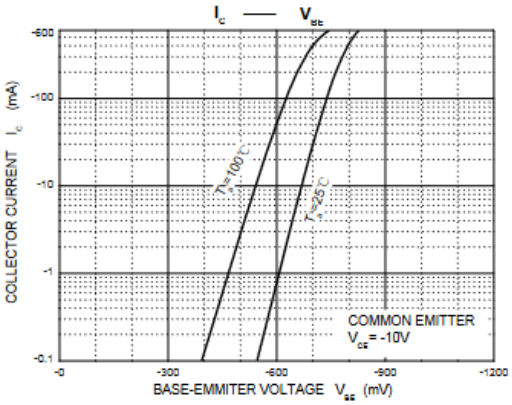

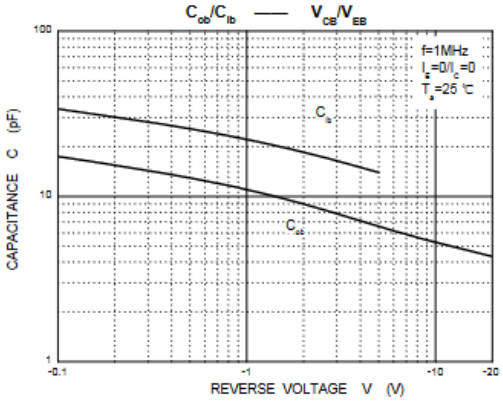

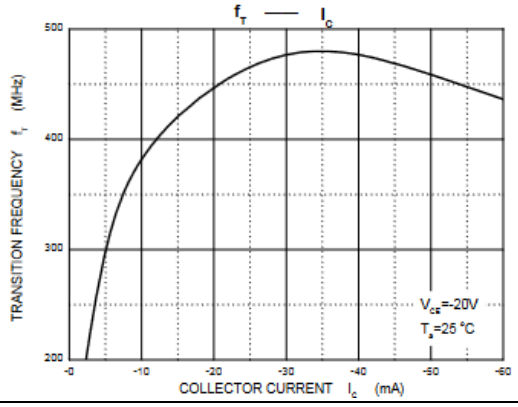

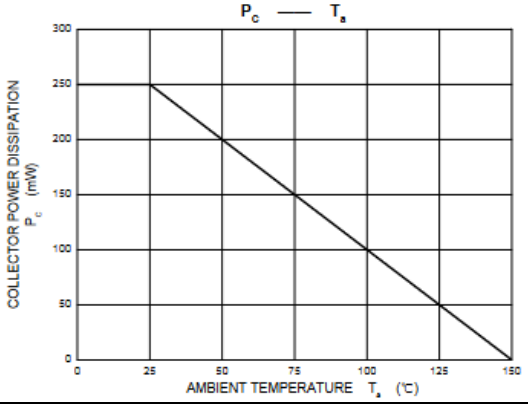

Suggested soldering pad layout
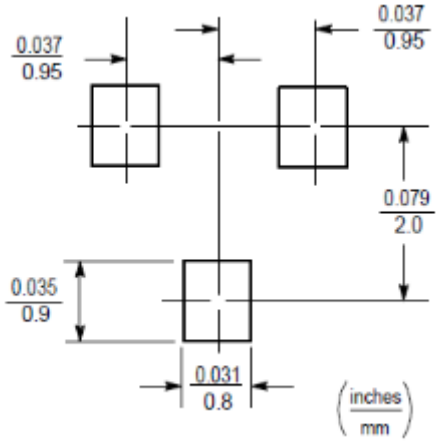
SOT-23

Ordering information			
Part Number	**Package**	**Shipping Quantity**	**Dimensions**
MMBT2907	SOT-23	**3000 pcs / reel**	---

Disclaimer

Akyga semi reserves the right to make changes without notice to any product specification herein, to make corrections, modifications, enhancements or other changes. Akyga semi or anyone on its behalf assumes no responsibility or liability for any errors or inaccuracies. Data sheet specifications and its information contained are intended to provide a product description only. "Typical" parameters which may be included on Akyga semi data sheets and/ or specifications can and do vary in different applications and actual performance may vary over time. Akyga semi does not assume any liability arising out of the application or use of any product or circuit. Akyga semi products are not designed, intended or authorized for use in medical, life-saving implant or other applications intended for life-sustaining or other related applications where a failure or malfunction of component or circuitry may directly or indirectly cause injury or threaten a life without expressed written approval of Akyga semi. Customers using or selling Akyga semi components for use in such applications do so at their own risk and shall agree to fully indemnify Akyga semi and its subsidiaries harmless against all claims, damages and expenditures.