Medium Current Adjustable Voltage Regulator

Primary characteristics		
Parameter	**Value**	**Unit**
Output voltage	1.2 ~ 37	V
Output current	1.5	A

Packages

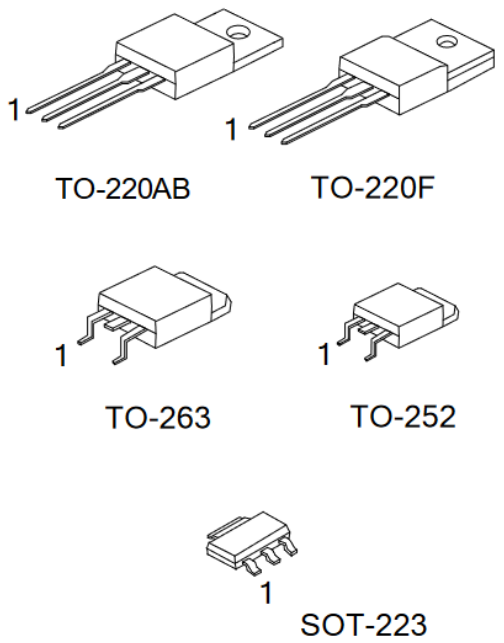

Features

- Internal thermal overload protection
- Internal short circuit current limiting
- Output transistor safe area compensation
- Pb-free and **RoHS** compliant

Part numbering system

LM317A	**-**	**MSI**	**-**	**R**
↓ Series code		↓ Package type: MSI: SOT-223 AT: TO-220AB AF: TO-220F AD: TO-252 AS: TO-263		↓ Packing type: **R: Tape reel**

Part numbering details and ordering information

Ordering number		Package	Pin assignment			Packing
Lead free	Halogen free		1	2	3	
LM317AL-MSI	LM317AG-MSI	SOT-223	ADJ	V_{OUT}	V_{IN}	Tape reel
LM317AL-AT	LM317AG-AT	TO-220AB	ADJ	V_{OUT}	V_{IN}	Tube
LM317AL-AF	LM317AG-AF	TO-220F	ADJ	V_{OUT}	V_{IN}	Tube
LM317AL-AD	LM317AG-AD	TO-252	ADJ	V_{OUT}	V_{IN}	Tape reel
LM317AL-AS	LM317AG-AS-R	TO-263	ADJ	V_{OUT}	V_{IN}	Tape reel

Absolute maximum ratings			
Parameter	**Symbol**	**Rating**	**Unit**
Input-output voltage differential	V_{IN}-V_{OUT}	40	V
Power dissipation	P_D	Internally limited	
Junction temperature	T_J	+125	°C
Operating temperature	T_{OPR}	-40 ~ +85	°C
Storage Temperature	T_{STG}	-65 ~ +150	°C
Notes: Absolute maximum ratings are those values beyond which the device could be permanently damaged. Absolute maximum ratings are stress ratings only and functional device operation is not implied.			

Thermal data				
Parameter		**Symbol**	**Rating**	**Unit**
Junction to ambient	SOT-223	θ_{JA}	140	°C/W
	TO-220AB/TO-220F		50	
	TO-252		103	
	TO-263		62.5	
Junction to case	SOT-223	θ_{JC}	23.5	
	TO-220AB/TO-263		5.0	
	TO-220F		8.0	
	TO-252		12	

Electrical characteristics							
Parameter	**Symbol**	**Test conditions**		**Min.**	**Typ.**	**Max.**	**Unit**
Line regulation	$\Delta V_{OUT}/V_{OUT}$	3V≤V_{IN}-V_{OUT}≤40V, I_{OUT}=100mA		-	0.01	0.04	%/V
Load regulation	ΔV_{OUT}	10mA≤I_{OUT}≤1.5A	V_{OUT}≤5V	-	5	25	mV
			V_{OUT}≥5V	-	0.1	0.5	%
Adjustable pin current	I_{ADJ}			-	50	100	µA
Adjustable pin current change	ΔI_{ADJ}	3V≤V_{IN}-V_{OUT}≤40V 10mA≤I_{OUT}≤500mA		-	0.2	5	µA
Reference voltage	V_{REF}	3V≤V_{IN}-V_{OUT}≤40V 10mA≤I_{OUT}≤1.5A, P_D<P_{MAX}		1.2	1.25	1.3	V
Temperature stability		T_{MIN}≤T_J≤T_{MAX}		-	0.7	-	%/V_{OUT}
Minimum load current for regulation	$I_{L(MIN)}$	V_{IN}-V_{OUT}=40V		-	-	4.5	mA
Maximum output current	$I_{O(MAX)}$	V_{IN}-V_{OUT}=40V, P_D≤P_{MAX}		0.3	0.4	-	A
		V_{IN}-V_{OUT}=15V, P_D<P_{MAX}		1.5	2.2	-	
RMS noise vs. % of V_{OUT}	eN	10Hz≤f≤10kHz		-	0.003	-	%/V_{OUT}
Ripple rejection	RR	V_{OUT}=10V, f=120Hz	C_{ADJ}=0	-	65	-	dB
			C_{ADJ}=10µF	66	80	-	
Notes: V_{IN}-V_{OUT}=5V, I_{OUT}=0.5A, P_{MAX}=20W, T_a=25°C, unless otherwise specified.							

Linear integrated circuit block diagram

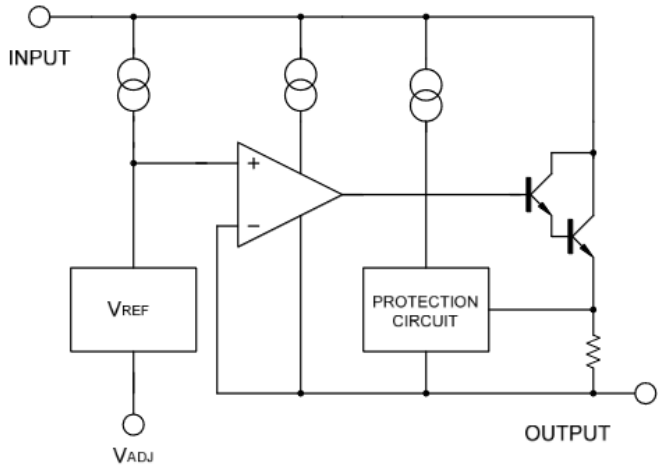

Application circuits

Programmable voltage regulator

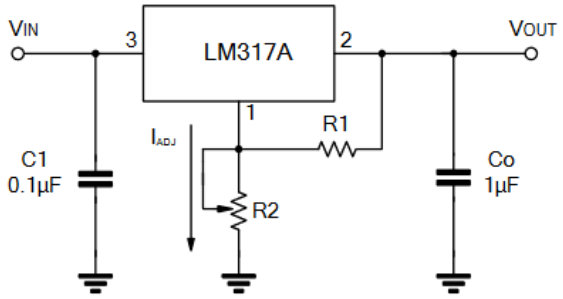

$V_{OUT}=1.25V\times(1+R2/R1)+I_{ADJ}\times R2$

C1 is required when regulator is located an appreciated distance from power supply. Co is needed to improve transient response.

Regulator with On-off control

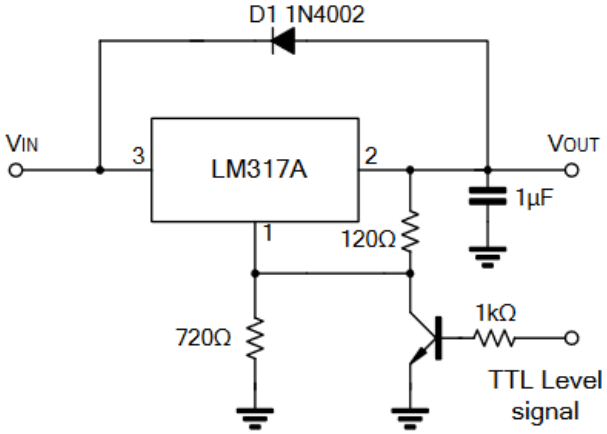

Soft start application

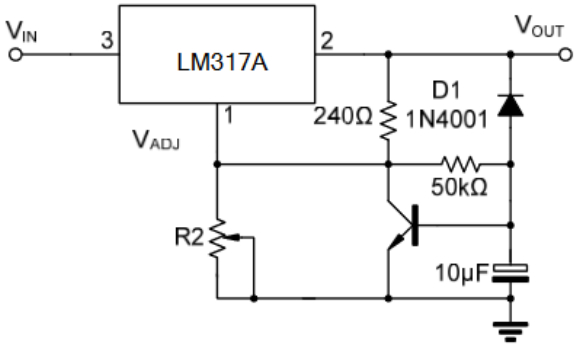

Constant current application

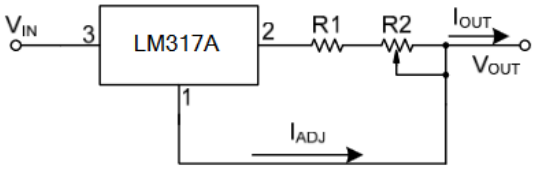

$$I_{O(MAX)}=\left(\frac{V_{REF}}{R1}\right)+I_{ADJ}=\frac{1.25V}{R1}$$

$$I_{O(MIN)}=\left(\frac{V_{REF}}{R1+R2}\right)+I_{ADJ}=\frac{1.25V}{R1+R2}$$

$5mA < I_{OUT} < 100mA$

Performance curves

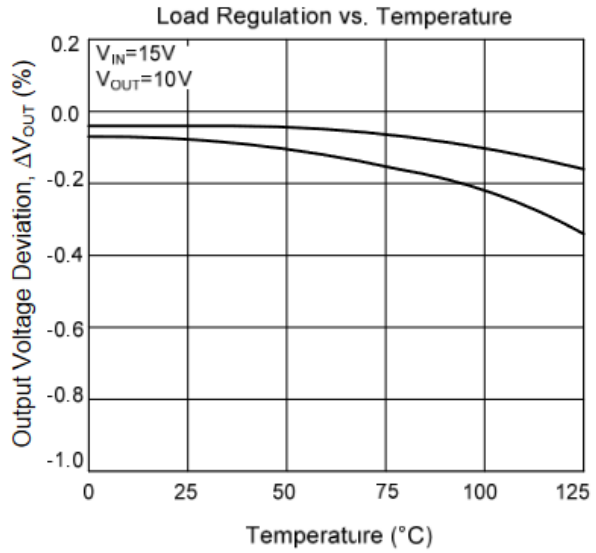

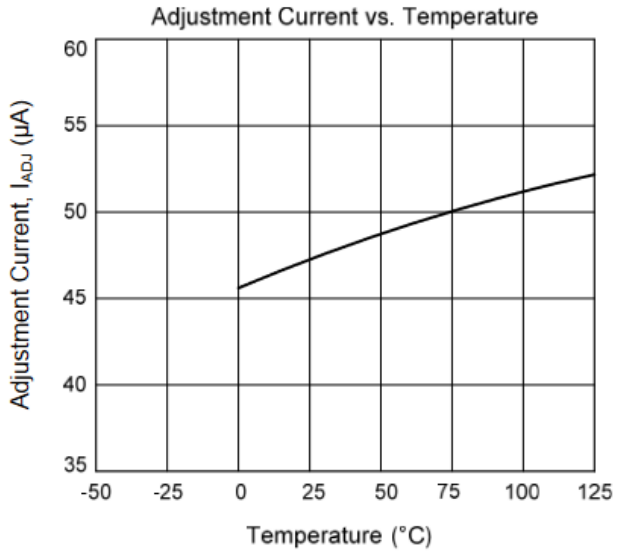

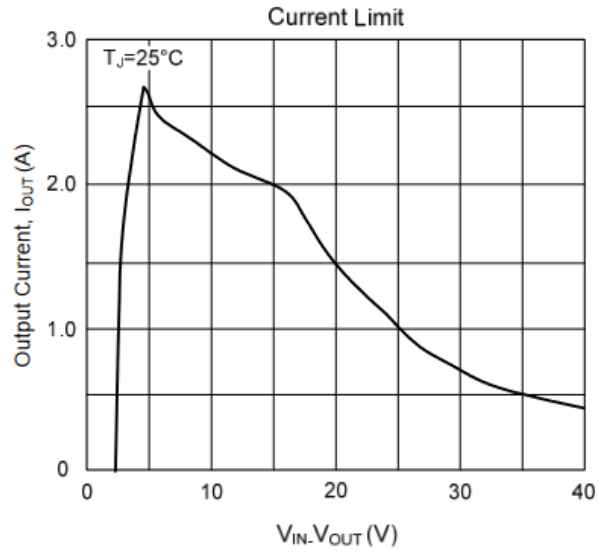

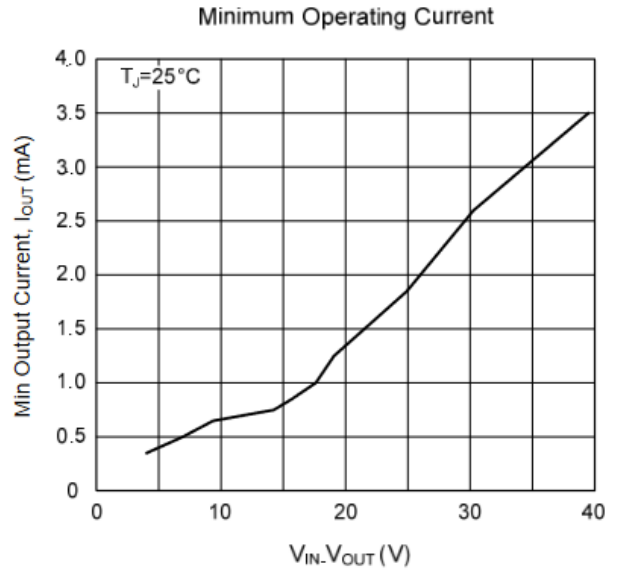

Disclaimer

Akyga semi reserves the right to make changes without notice to any product specification herein, to make corrections, modifications, enhancements or other changes. Akyga semi or anyone on its behalf assumes no responsibility or liability for any errors or inaccuracies. Data sheet specifications and its information contained are intended to provide a product description only. "Typical" parameters which may be included on Akyga semi data sheets and/ or specifications can and do vary in different applications and actual performance may vary over time. Akyga semi does not assume any liability arising out of the application or use of any product or circuit. Akyga semi products are not designed, intended or authorized for use in medical, life-saving implant or other applications intended for life-sustaining or other related applications where a failure or malfunction of component or circuitry may directly or indirectly cause injury or threaten a life without expressed written approval of Akyga semi. Customers using or selling Akyga semi components for use in such applications do so at their own risk and shall agree to fully indemnify Akyga semi and its subsidiaries harmless against all claims, damages and expenditures.