N-Channel MOSFET

Primary characteristics			
Symbol	**Parameter**	**Value**	**Unit**
I_D	Continuous drain current (@T_a=25°C)	340	mA
V_{DS}	Drain source voltage	50	V
R_{DSON} @V_{GS}=4.5V	Static drain-source on-resistance	3.0	Ω

Features

- **SOT-23** case for easy automatic insertion
- Pb-free and **RoHS** compliant
- Low input Capacitance
- Fast Switching Speed
- Low Input / Output Leakage
- Voltage controlled small signal switch

Application

- Battery operated systems
- Solid-state relays
- Direct logic-level interface: TTL/CMOS

Case dimensions

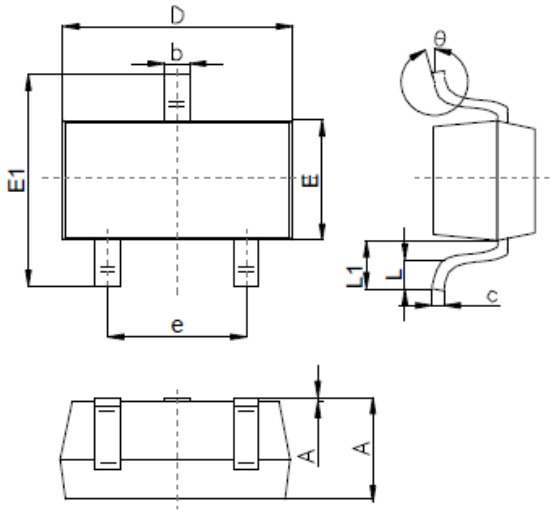

SOT-23 (TO-236AB)

Unit	A	A_1max	b	c	D	E	E1	e	L	L_1	θ
mm	0.9 - 1.4	0.1	0.30 - 0.50	0.08 - 0.20	2.9 ±0.2	1.2 - 1.6	2.25 - 2.80	1.9 ±0.1	0.10 - 0.50	0.40 - 0.55	0° - 10°

Absolute maximum ratings (T_A = 25°C unless otherwise noted)			
Characteristic	**Symbol**	**Value**	**Unit**
Drain-source voltage	V_{DS}	50	V
Gate-source voltage	V_{GS}	±20	V
Continuous drain current	I_D	340	mA
Pulsed drain current[1]	I_{DM}	1.5	A
Power Dissipation[2]	P_D	350	mW
Operating junction temperature range	T_J, T_{STG}	-55 ~ 150	°C
Thermal resistance junction-ambient[2]	$R_{\theta JA}$	357	°C/W

Electrical characteristics (T_A = 25°C)						
Characteristic	**Test condition**	**Symbol**	**Value**			**Unit**
			Min.	**Typ.**	**Max.**	
Drain-source breakdown voltage	V_{GS}=0V, I_D=250μA	V_{DSS}	50	-	-	V
Zero gate voltage drain current	V_{DS}=50V, V_{GS}=0V	I_{DSS}	-	-	1.0	μA
Gate-body leakage current	V_{GS}=±20V, V_{DS}=0V	I_{GSS}	-	-	±100	nA
Gate threshold voltage	V_{DS}=V_{GS}, I_D=250μA	$V_{GS(th)}$	0.8	1.2	1.6	V
Static drain-source on-state resistance[3]	V_{GS}=10V, I_D=300mA	$R_{DS(ON)}$	-	1.1	2.5	Ω
	V_{GS}=4.5V, I_D=200mA		-	2.2	3.0	

Dynamic electrical characteristics						
Characteristic	**Test condition**	**Symbol**	**Value**			**Unit**
			Min.	**Typ.**	**Max.**	
Input capacitance	V_{DS}=25V V_{GS}=0V f=1.0MHz	C_{iss}	-	28.5	-	pF
Output capacitance		C_{oss}	-	2.7	-	
Reverse transfer capacitance		C_{rss}	-	1.78	-	
Total gate charge	V_{DS}=25V V_{GS}=10V I_D=300mA	Q_g	-	1.7	2.5	nC
Gate source charge		Q_{gs}	-	0.4	-	
Gate drain charge		Q_{gd}	-	0.24	-	

Switching characteristics						
Characteristic	**Test condition**	**Symbol**	**Value**			**Unit**
			Min.	**Typ.**	**Max.**	
Turn on delay time	V_{DS}=25V V_{GS}=10V I_D=300mA R_G=6.0Ω	$t_{d(ON)}$	-	2.6	-	ns
Turn on rise time		t_r	-	18.8	-	
Turn off delay time		$t_{d(OFF)}$	-	9.7	-	
Turn off fall time		t_f	-	47	-	

Source drain diode characteristics						
Characteristic	**Test condition**	**Symbol**	**Value**			**Unit**
			Min.	**Typ.**	**Max.**	
Maximum body-diode continuous current	T_A=25℃	I_{SD}	-	-	340	mA
Diode forward voltage	I_S=300mA, V_{GS}=0V	V_{SD}	-	-	1.2	V

Notes:

1. Pulse width limited by maximum allowable junction temperature.

2.The value of PD&RθJA is measured with the device mounted on 1 in2 FR-4 board with 2oz.Copper, double sided, in a still air environment with Ta=25℃.

3. Pulse test; Pulse width≤300us, duty cycle ≤ 2%

Typical characteristics

Output Characteristics

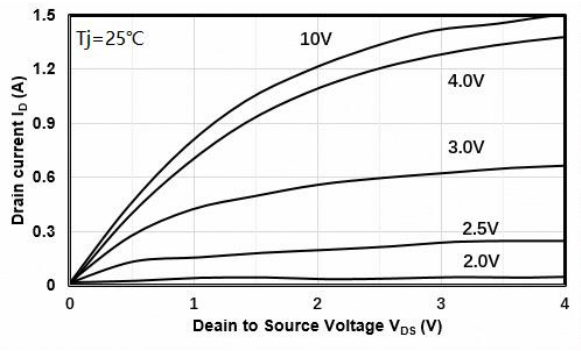

Transfer Characteristics

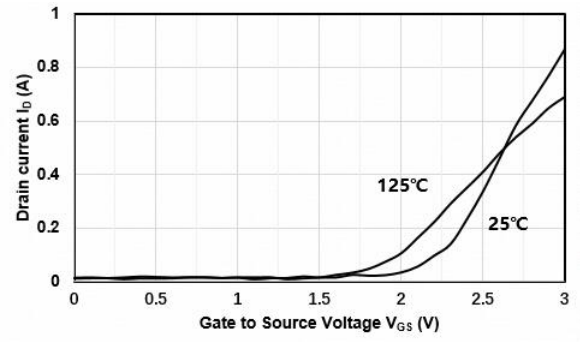

Capacitance Characteristics

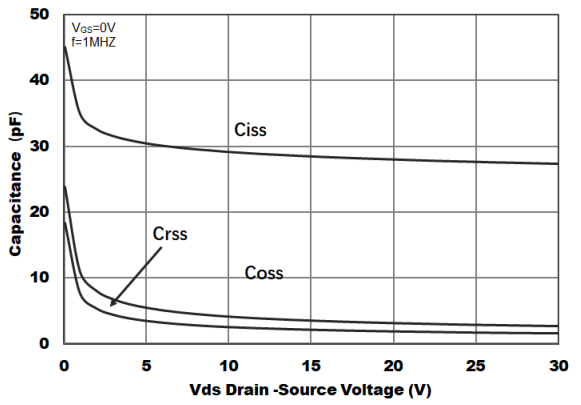

Gate Charge

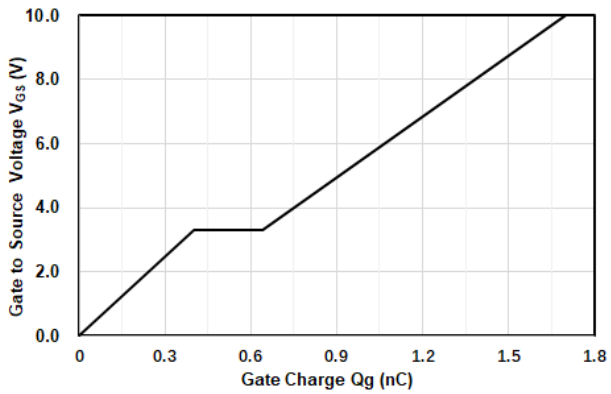

Drain-Source on Resistance

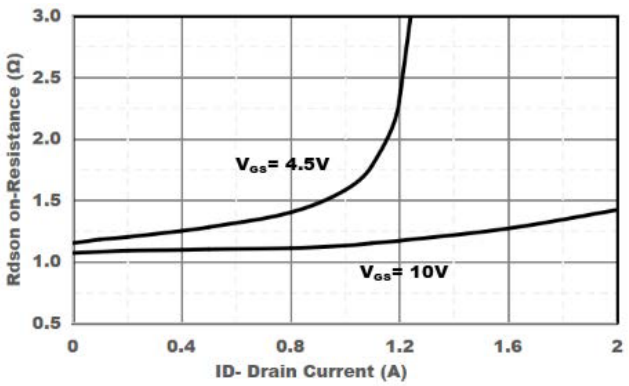

Drain-Source on Resistance

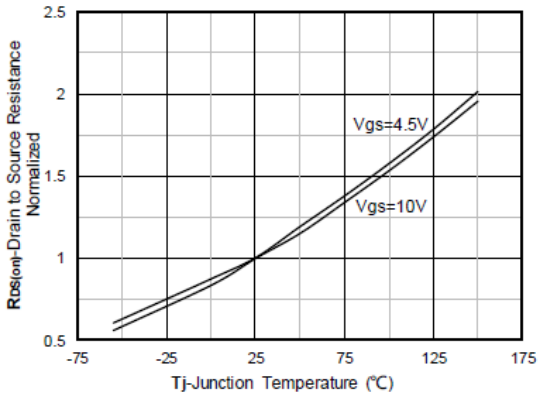

Typical characteristics

Safe Operation Area

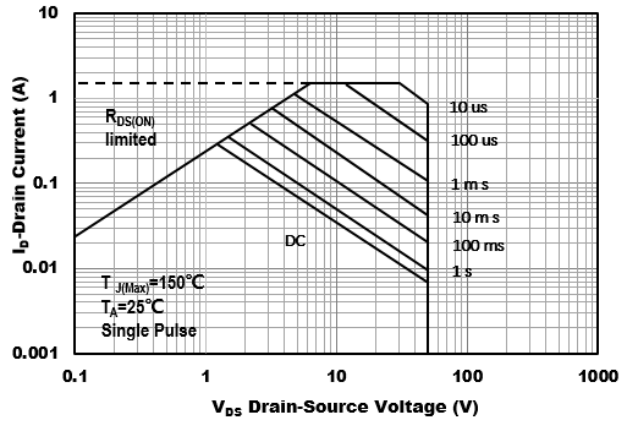

Normalized Threshold voltage

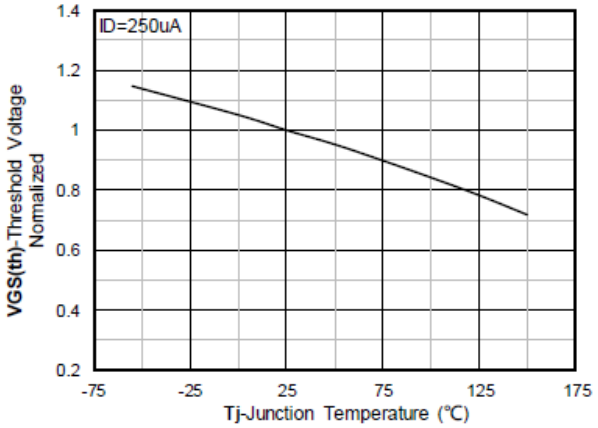

Forward characteristics of reverse diode

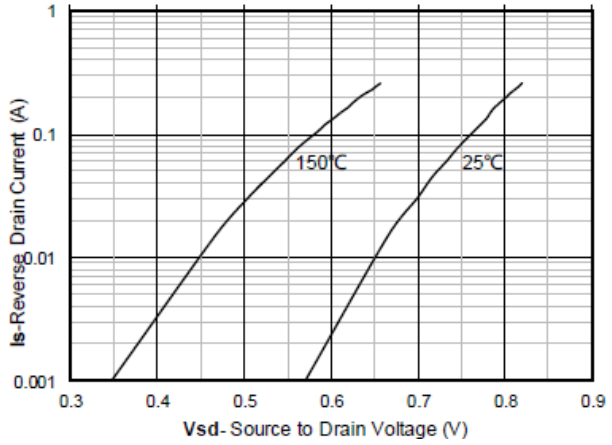

Switching wave

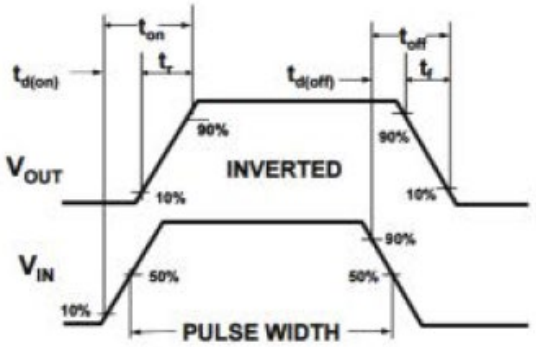

Suggested soldering pad layout
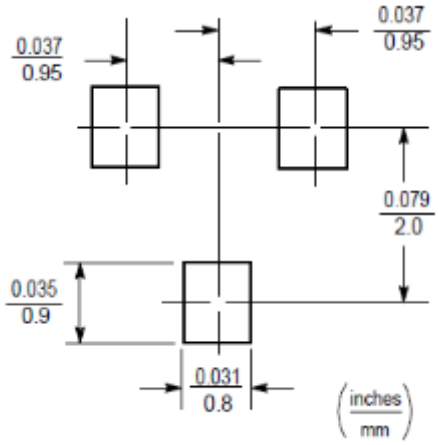
SOT-23

Ordering information			
Part Number	**Package**	**Shipping Quantity**	**Dimensions**
BSS138	SOT-23	**3000 pcs / 7” reel**	---

Disclaimer

Akyga semi reserves the right to make changes without notice to any product specification herein, to make corrections, modifications, enhancements or other changes. Akyga semi or anyone on its behalf assumes no responsibility or liability for any errors or inaccuracies. Data sheet specifications and its information contained are intended to provide a product description only. "Typical" parameters which may be included on Akyga semi data sheets and/ or specifications can and do vary in different applications and actual performance may vary over time. Akyga semi does not assume any liability arising out of the application or use of any product or circuit. Akyga semi products are not designed, intended or authorized for use in medical, life-saving implant or other applications intended for life-sustaining or other related applications where a failure or malfunction of component or circuitry may directly or indirectly cause injury or threaten a life without expressed written approval of Akyga semi. Customers using or selling Akyga semi components for use in such applications do so at their own risk and shall agree to fully indemnify Akyga semi and its subsidiaries harmless against all claims, damages and expenditures.