Low Dropout Voltage Regulator

Primary characteristics			
Symbol	**Parameter**	**Value**	**Unit**
V_{IN}	Input voltage	18	V
V_{OUT}	Output voltage	3.3	V
P_D	Maximum power dissipation	600	mW

Features

- **SOT-223** case for easy automatic insertion
- Pb-free and **RoHS** compliant
- Low Dropout Voltage
- Load regulation: 0.5% max
- Optimized for low voltage
- On-chip thermal limiting

Application

- Post regulator for switching DC/DC converter
- High efficiency linear regulator
- Battery chargers
- PC add on card
- Motherboard clock supplies
- LCD monitor
- Set top box

Case dimensions

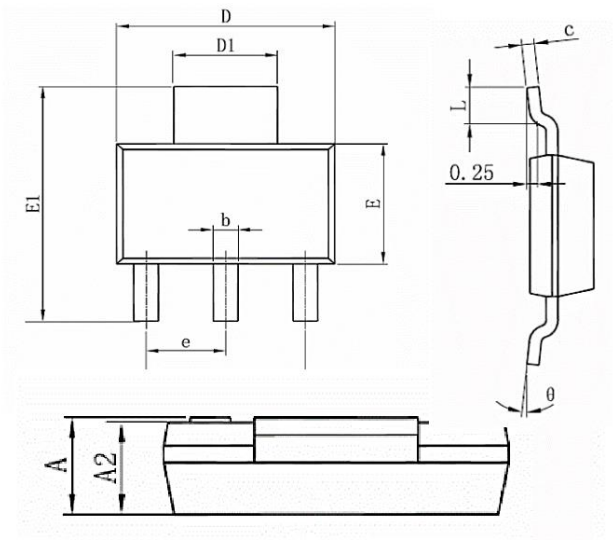

SOT-223

Unit	A	A2	b	c	D	D1	E	e	e1	L	θ
mm	1.66 ±0.14	1.6 ±0.1	0.74 ±0.08	0.30 ±0.05	6.3 ±0.1	3.0 ±0.1	3.5 ±0.2	2.3 (BSC)	4.6 ±0.1	1.0 +0.15 -0.10	5° ±5

Maximum ratings (T_C = 25°C)			
Characteristics	**Symbol**	**Value**	**Unit**
Input voltage	V_{IN}	18	V
DC output current	I_{OUT}	P_D / (V_{IN} – V_{OUT})	mA
Operating junction temperature range	T_J	-40 ~ 125	°C
Thermal resistance	$R_{\theta JA}$	150	°C/W
Maximum power dissipation	P_D	600	mW

Electrical characetristics (V_{IN}=<7.0V, TJ = 25°C unless otherwise specified)					
Characteristics	**Test condition**	**Value**			**Unit**
		Min.	**Typ.**	**Max.**	
Reference voltage	$V_{IN}=V_{OUT}+2.0V$, $10mA \le I_{OUT} \le 0.8A$ AMS1117-ADJ	1.225(-2%)	1.25	1.275(+2%)	V
Output voltage	$10mA \le I_{OUT} \le 0.8A$, $V_{IN}=V_{OUT}+2V$ AMS1117-3.3	3.234	3.3	3.366	V
Line regulation[1), 2)]	$(V_{OUT}+1.5V) \le V_{IN} \le 12V$ $I_{OUT}=10mA$	-	0.15	0.3	%
	$(V_{IN}-V_{OUT})=2.0V$, $10mA \le I_{OUT} \le 0.8A$	-	0.2	0.5	
Dropout voltage	$V_{REF}=1\%$, $I_{OUT}=0.8A$	-	1.3	1.4	V
Current limit	$(V_{IN}-V_{OUT})=2.0V$	0.8	-	-	A
Adjust pin current	AMS1117-ADJ $1.5V \le (V_{IN}-V_{OUT}) \le 7.0V$ $10mA \le I_{OUT} \le 0.8A$	-	50	120	µA
Minimum load current	$1.5V \le (V_{IN}-V_{OUT}) \le 12V$	-	3.0	10	mA
Quiescent current	$V_{IN}=V_{OUT}+1.25V$	-	3.0	10	mA
Ripple rejection	f=120Hz, C_{OUT}=22µF tantalum, $(V_{IN}-V_{OUT})=3.0V$, $I_{OUT}=0.8A$	60	70	-	dB
Thermal regulation	T_A=25°C, 30ms pulse	-	0.008	0.04	%/W
Temperature stability		-	0.5	-	%
Long term stability	T_A=125°C, 1000 hrs	-	0.3	1.0	%
RMS output noise (% of V_{OUT})	T_A=25°C, 10Hz≤f≤10kHz	-	0.003	-	%
Thermal resistance, junction to case		-	15	-	°C/W
Thermal shutdown	Junction temperature	-	150	-	°C
Thermal shutdown hysteresis		-	10	-	°C

Note :

1. See thermal regulation specifications for changes in output voltage due to heating effects. Load and line regulation are measured at a constant junction temperature by low duty cycle pulse testing.
2. Line and load regulation are guaranteed up to the maximum power dissipation (1.2W). Power dissipation is determined by input/output differential and the output current. Guaranteed maximum output power will not be available over the full input/output voltage range.
3. Output current must be limited to meet the absolute maximum ratings of the part.

Block diagram

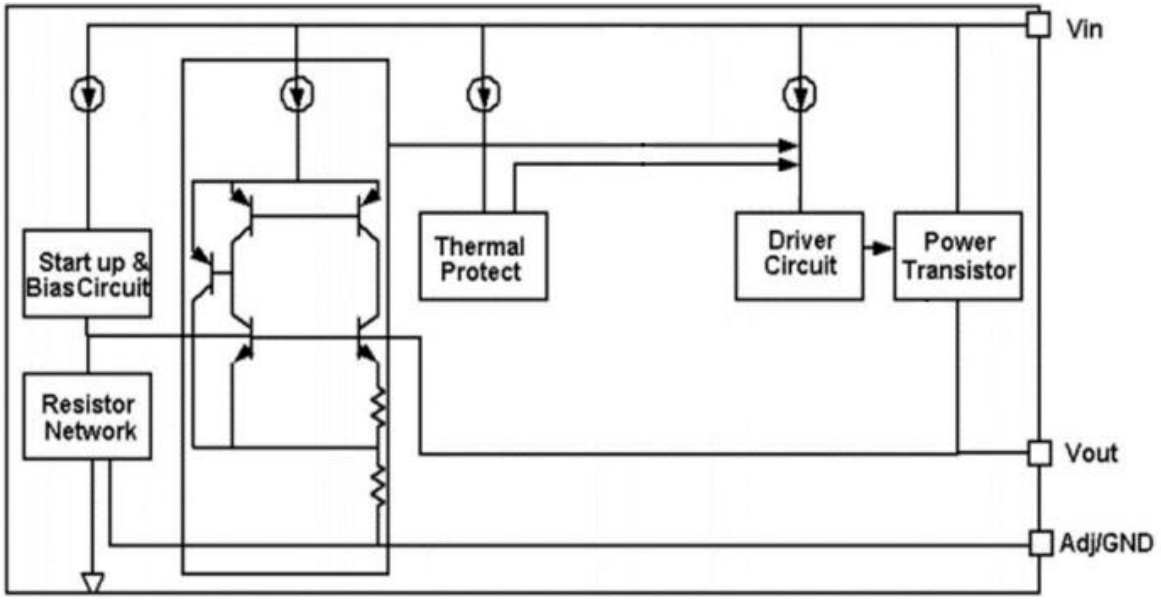

Typical characteristics

Line regulation

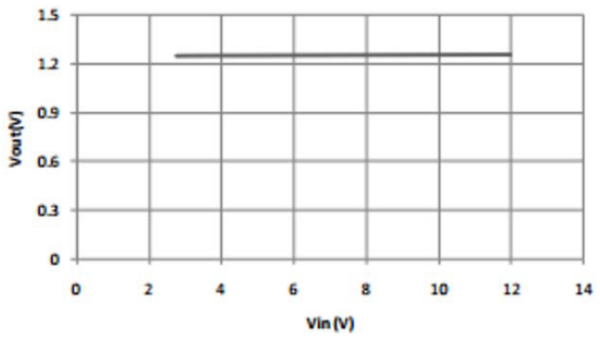

Dropout voltage

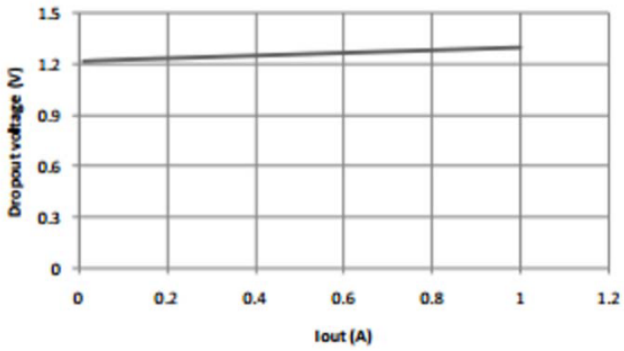

Load regulation

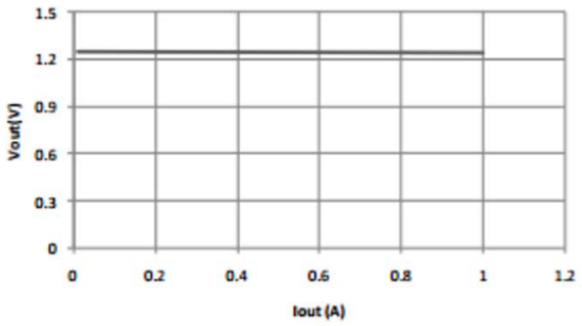

Thermal performance with OTP

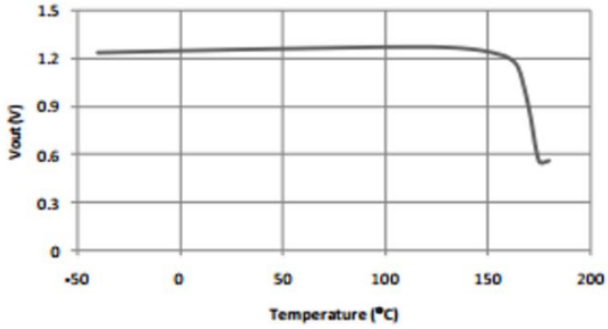

Application Information

Primary characteristics

The AMS1117 regulates the output by comparing the output voltage to an internally generated reference voltage. On the adjustable version as shown in Fig.1, the VREF is available externally as 1.25V between VOUT and ADJ. The voltage ratio formed by R1 and R2 should be set to conduct 10mA (minimum output load).

The output voltage is given by the following equation:

$$V_{OUT} = V_{REF}\left(1 + \frac{R_2}{R_1}\right) + I_{ADJ} \times R_2$$

On fixed versions of AMS1117, the voltage divider is provided internally

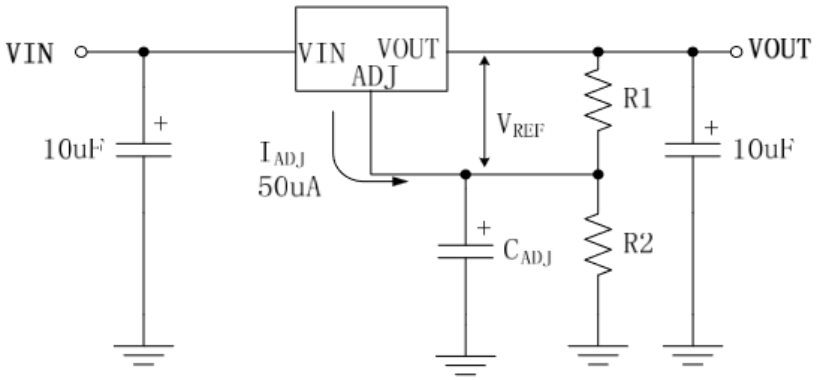

Figure 1. Basic Adjustable Regulator

Input bypass capacitor

An input capacitor is recommended. A 10µF tantalum on the input is a suitable input bypassing for almost all applications.

Adjust terminal bypass capacitor

The adjust terminal can be bypassed to ground with a bypass capacitor (C_{ADJ}) to improve ripple rejection. This bypass capacitor prevents ripple from being amplified as the output voltage is increased. At any ripple frequency, the impedance of the C_{ADJ} should be less than R_1 to prevent the ripple from being amplified:

$$(2\pi \times f_{RIPPLE} \times C_{ADJ}) < R_1$$

The R_1 is the resistor between the output and the adjust pin. Its value is normally in the range of 100Ω ~ 200Ω.

Output capacitor

AMS1117 requires a capacitor from V_{OUT} to GND to provide compensation feedback to the internal gain stage. This is to ensure stability at the output terminal. Typically, a 10µF tantalum or 50µF aluminum electrolytic is sufficient.

Note: it is important that the ESR for this capacitor does not exceed 0.5Ω.

The output capacitor does not have a theoretical upper limit and increasing its value will increase stability. C_{OUT}=100µF or more is typical for high current regulator design. for example, with R_1=124Ω and f_{RIPPLE}=120Hz, the C_{ADJ} should be >11µF.

Load regulation

When the adjustable regulator is used (Fig. 2), the best load regulation is accomplished when the top of the resistor divider (R_1) is connected directly to the output pin of the AMS1117. When so connected, R_P is not multiplied by the divider ratio. For Fixed output version, the top of R_1 is internally connected to the output and ground pins can be connected to low side of the load.

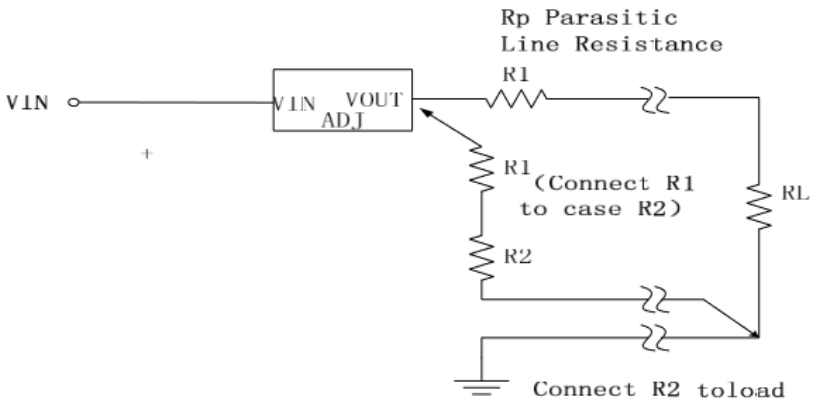

Figure 2. Best load regulation using adjustable output regulator

Thermal protection

AMS1117 has thermal protection which limits junction temperature to 150℃ . However, device functionality is only guaranteed to a maximum junction temperature of 125℃. The power dissipation and junction temperature for AMS1117 in DPAK package are given by:

$$P_D = (V_{IN} - V_{OUT}) \times I_{OUT}$$
$$T_{Junction} = T_{Ambient} + (P_D \times \theta_{JA})$$

Note: $T_{Junction}$ must not exceed 125℃.

Thermal consideration

The AMS1117 series contain thermal limiting circuitry designed to protect itself from over-temperature conditions. Even for normal load conditions, maximum junction temperature ratings must not be exceeded. As mention in thermal protection section, we need to consider all sources of thermal resistance between junction and ambient. It includes junction-to case, case-to-heat-sink interface, and heat sink thermal resistance itself.

Junction-to-case thermal resistance is specified from the IC junction to the bottom of the case directly below the die. Proper mounting is required to ensure the best possible thermal flow from this area of the package to the heat sink. The case of all devices in this series is electrically connected to the output.

Therefore, if the case of the device must be electrically isolated, a thermally conductive spacer is recommended.

Suggested soldering pad layout

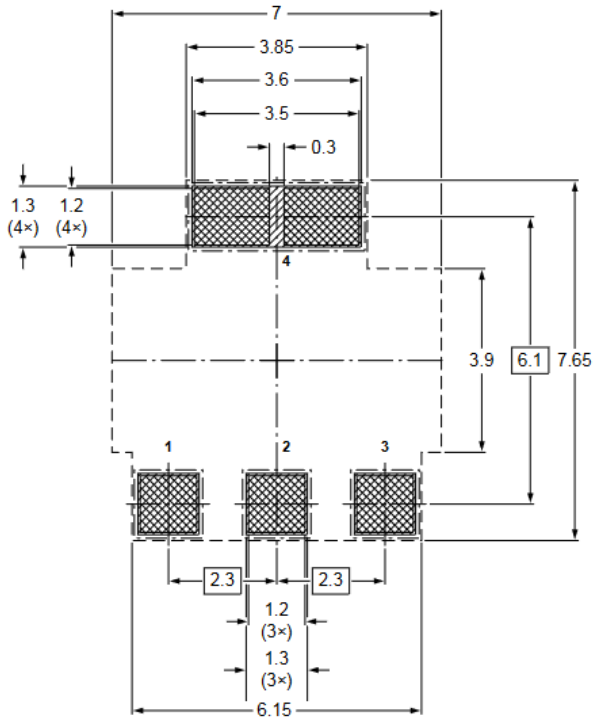

SOT-223

Ordering information			
Part Number	**Package**	**Shipping Quantity**	**Dimensions**
AMS1117-3.3	SOT-223	**2500 pcs / reel**	---

Disclaimer

Akyga semi reserves the right to make changes without notice to any product specification herein, to make corrections, modifications, enhancements or other changes. Akyga semi or anyone on its behalf assumes no responsibility or liability for any errors or inaccuracies. Data sheet specifications and its information contained are intended to provide a product description only. "Typical" parameters which may be included on Akyga semi data sheets and/ or specifications can and do vary in different applications and actual performance may vary over time. Akyga semi does not assume any liability arising out of the application or use of any product or circuit. Akyga semi products are not designed, intended or authorized for use in medical, life-saving implant or other applications intended for life-sustaining or other related applications where a failure or malfunction of component or circuitry may directly or indirectly cause injury or threaten a life without expressed written approval of Akyga semi. Customers using or selling Akyga semi components for use in such applications do so at their own risk and shall agree to fully indemnify Akyga semi and its subsidiaries harmless against all claims, damages and expenditures.