P-Channel Enhancement Mode MOSFET

Primary characteristics			
Symbol	**Parameter**	**Value**	**Unit**
I_D	Continuous drain current	4.0	A
V_{DSS}	Drain source voltage	60	V
R_{DSON}	Static drain-source on-resistance	135	mΩ MAX

Features

- **SOP-8** case for easy automatic insertion
- Pb-free and **RoHS** compliant
- High density cell design for ultralow $R_{DS(ON)}$
- Fully characterized avalanche voltage and current
- Excellent package for good heat dissipation
- Molding compound: UL Flammability Classification Rating 94V-0
- Terminals: matte tin-plated leads; solderability-per MIL-STD-202, Method 208

Applications

- Power switching applications
- Hard switched and high frequency circuits
- Uninterruptible power supply

Case dimensions

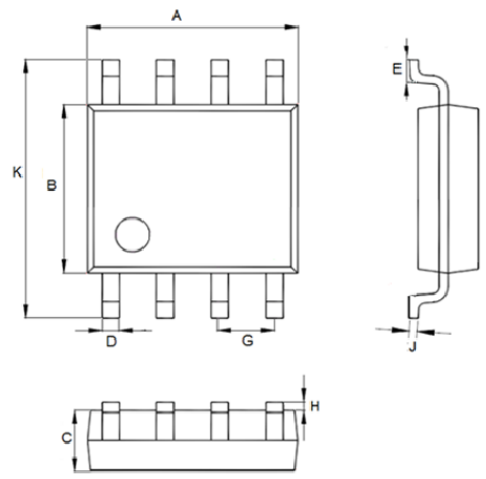

SOP-8

Unit		A	B	C	D	E	G	H	J	K
mm	MIN	4.8	3.8	1.3	0.3	0.4	1.17	0.1	0.1	5.8
	MAX	5.2	4.2	1.5	0.5	1.0	1.37	0.3	0.3	6.2

Maximum ratings (T_A = 25°C unless otherwise noted)			
Characteristic	**Symbol**	**Value**	**Unit**
Drain-source voltage	V_{DSS}	60	V
Gate-source voltage	V_{GSS}	±20	V
Continuous drain current (T_C=25°C)	I_D	4.0	A
Pulsed drain current [2)]	I_{DM}	20	A
Power Dissipation	P_D	1.6	W
Operating junction temperature range	T_J, T_{STG}	-55 ~ 150	°C

Thermal characteristics						
Characteristic	**Test condition**	**Symbol**	**Value**			**Unit**
			Min.	**Typ.**	**Max.**	
Thermal resistance junction-ambient [1)]	-	$R_{\theta JA}$	-	78	-	°C/W

Electrical characteristics (T_A = 25°C)

Characteristic	Test condition	Symbol	Value Min.	Value Typ.	Value Max.	Unit
Drain-source breakdown voltage	V_{GS}=0V, I_D=250µA	V_{DSS}	60	-	-	V
Zero gate voltage drain current	V_{DS}=60V, V_{GS}=0V	I_{DSS}	-	-	1.0	µA
Gate body leakage current	V_{GS}=±20V, V_{DS}=0V	I_{GSS}	-	-	±100	nA
Gate threshold voltage [3]	V_{DS}=V_{GS}, I_D=250µA	$V_{GS(TH)}$	1.0	1.6	3.0	V
Drain-source on-state resistance [3]	V_{GS}=10V, I_D=4.0A	$R_{DS(ON)}$	-	70	90	mΩ
	V_{GS}=4.5V, I_D=4.0A		-	100	135	

Dynamic electrical characteristics [4]

Characteristic	Test condition	Symbol	Value Min.	Value Typ.	Value Max.	Unit
Forward transconductance	V_{DS}=5.0V, I_D=4.0A	g_{FS}	-	10	-	S
Input capacitance	V_{DS}=30V, V_{GS}=0V, f=1.0MHz	C_{ISS}	-	930	-	pF
Output capacitance		C_{OSS}	-	55	-	
Reverse transfer capacitance		C_{RSS}	-	41	-	
Turn ON delay time	V_{DS}=30V, V_{GS}=10V, R_G=3.0Ω, R_L=7.5Ω	$t_{d(ON)}$	-	8.0	-	ns
Turn ON rise time		t_r	-	4.0	-	
Turn OFF delay time		$t_{d(OFF)}$	-	32	-	
Turn OFF fall time		t_f	-	7.0	-	

Switching characteristics [4]

Characteristic	Test condition	Symbol	Value Min.	Value Typ.	Value Max.	Unit
Total gate-charge	V_{DS}=30V, V_{GS}=10V, I_D=4.0A	Q_G	-	20	-	nC
Gate to source charge		Q_{GS}	-	3.1	-	
Gate to drain (Miller) charge		Q_{GD}	-	3.2	-	

Source-drain diode characteristics

Characteristic	Test condition	Symbol	Value Min.	Value Typ.	Value Max.	Unit
Diode forward voltage [3]	I_{SD}=4.0A, V_{GS}=0V	V_{SD}	-	-	1.2	V
Source-drain current (body diode)		I_{SD}	-	-	4.0	A

Notes:

1) $R_{\theta JA}$ is the sum of the junction-to-case and case-to-ambient resistance where the case thermal reference is defined as the solder mounting surface of the drain pins. $R_{\theta JC}$ is guaranteed by design while $R_{\theta CA}$ is determined by the user's board design.
   a) 78°C/W when mounted on a 1in^2 pad of 2oz copper on FR-4 board
   b) 100°C/W when mounted on a minimum pad
2) Repetitive rating: pulse width limited by maximum junction temper
3) Pulse test: pulse width ≤300µs, duty cycle ≤2%
4) Guaranteed by design, not subject to production

Typical characteristics

Output characteristics

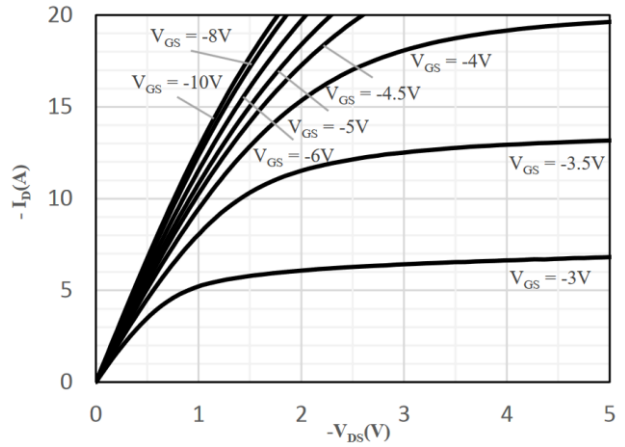

On-resistance vs. drain current and gate voltage

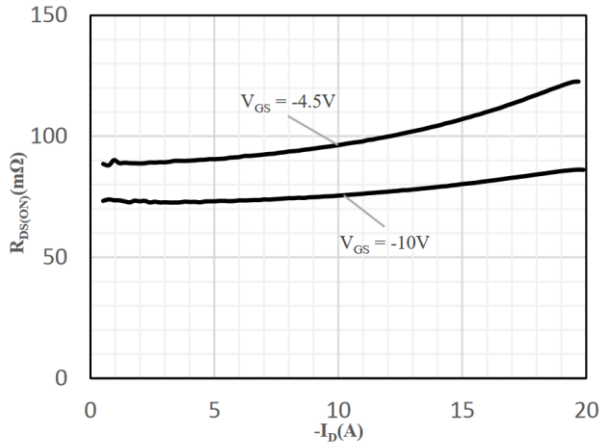

ON-resistance vs. gate-source voltage

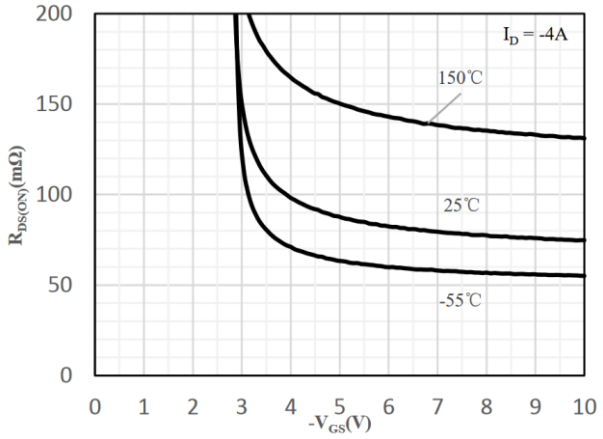

Body-diode characteristics

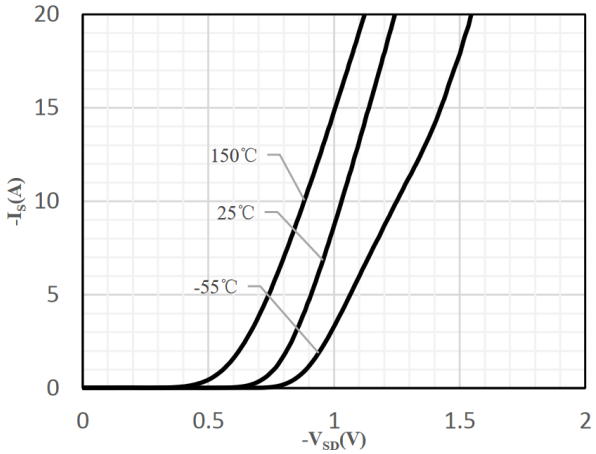

Normalized ON-resistance vs. junction temperature

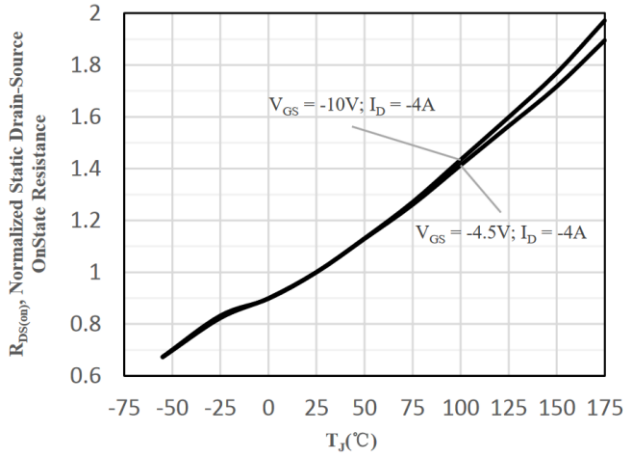

Transfer characteristics

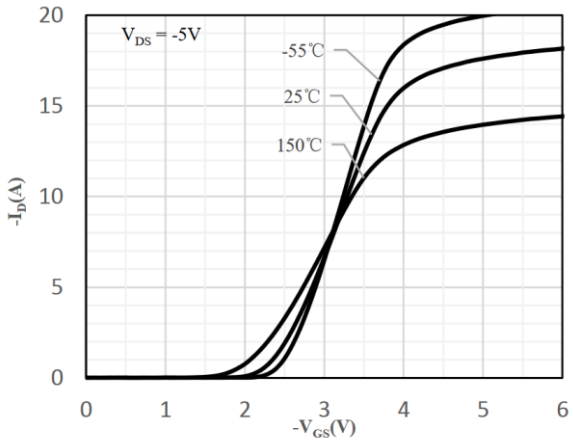

Typical characteristics

Capacitance characteristics

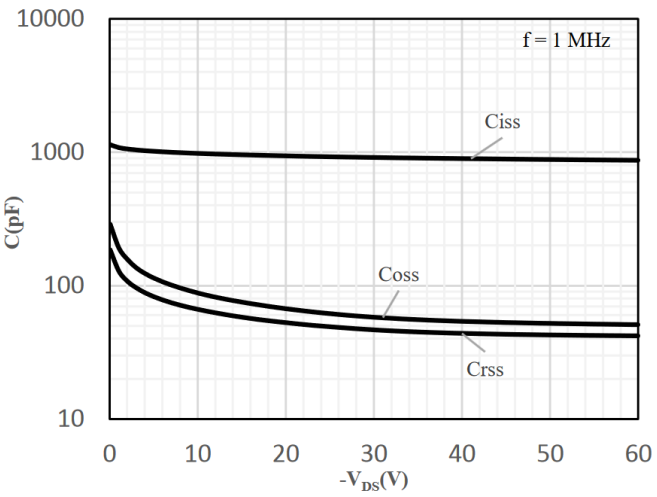

Gate-charge characteristics

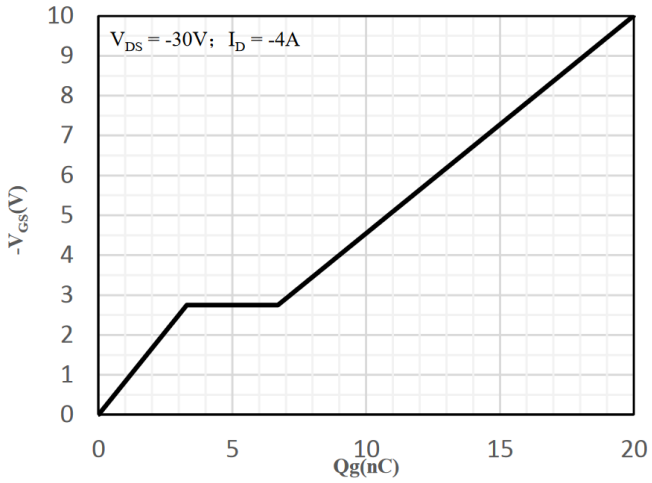

Normalized breakdown voltage vs. junction temperature

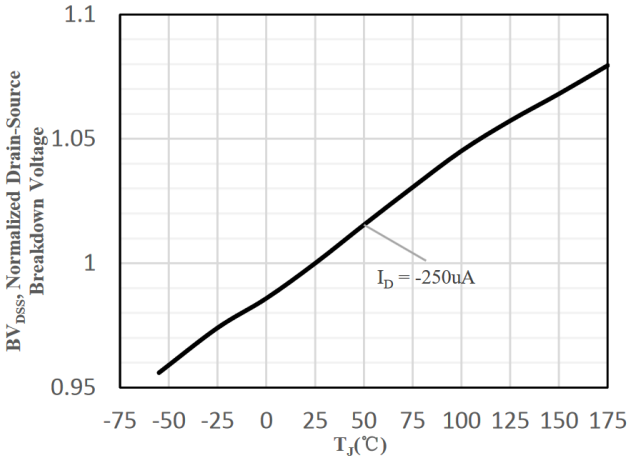

Normalized $V_{GS(th)}$ vs. junction temperature

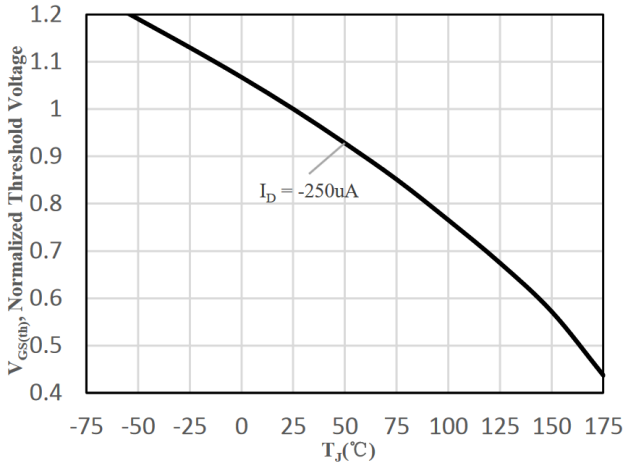

Suggested soldering pad layout
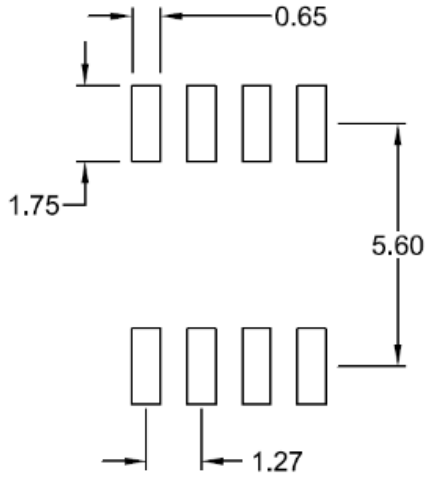
SOP-8

Ordering information				
Part Number	**Marking**	**Package**	**Shipping Quantity**	**Dimensions**
AKS4P06-S8	4P06	SOP-8	**4000 pcs / tape & reel**	---

Disclaimer

Akyga semi reserves the right to make changes without notice to any product specification herein, to make corrections, modifications, enhancements or other changes. Akyga semi or anyone on its behalf assumes no responsibility or liability for any errors or inaccuracies. Data sheet specifications and its information contained are intended to provide a product description only. "Typical" parameters which may be included on Akyga semi data sheets and/ or specifications can and do vary in different applications and actual performance may vary over time. Akyga semi does not assume any liability arising out of the application or use of any product or circuit. Akyga semi products are not designed, intended or authorized for use in medical, life-saving implant or other applications intended for life-sustaining or other related applications where a failure or malfunction of component or circuitry may directly or indirectly cause injury or threaten a life without expressed written approval of Akyga semi. Customers using or selling Akyga semi components for use in such applications do so at their own risk and shall agree to fully indemnify Akyga semi and its subsidiaries harmless against all claims, damages and expenditures.