P-Channel Enhancement Mode MOSFET

Primary characteristics			
Symbol	**Parameter**	**Value**	**Unit**
I_D	Continuous drain current (@T_C=25°C)	4.8	A
V_{DSS}	Drain-source voltage	12	V
R_{DSON}	Drain-source ON resistance (@V_{GS}=4.5V)	<32	mΩ

Application

- Electronic cigarette
- Load switch

Case dimensions

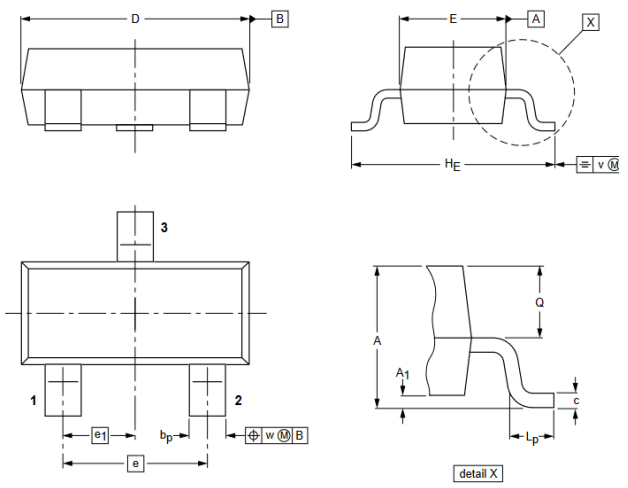

1 – Gate; 2 – Source; 3 – Drain

SOT-23 (TO-236AB)

Unit	A	A_1max	b_p	c	D	E	e	e_1	H_E	L_p	Q	v	w
mm	1.0 ±0.1	0.1	0.43 ±0.05	0.12 ±0.03	2.9 ±0.1	1.3 ±0.1	1.9	0.95	2.3 ±0.2	0.3 ±0.15	0.5 ±0.05	0.2	0.1

Absolute maximum ratings (T_A = 25°C unless otherwise noted)				
Characteristic		**Symbol**	**Value**	**Unit**
Drain-source voltage		V_{DS}	12	V
Gate-source voltage		V_{GS}	±12	V
Continuous drain current	V_{GS}=10V, T_C=25°C	I_D	4.8	A
	V_{GS}=10V, T_C=100°C		2.6	
Pulsed drain current [1)]		I_{DM}	16	A
Power Dissipation	T_C=25°C	P_D	1.0	W
Thermal resistance junction-ambient		$R_{\theta JA}$	125	°C/W
Operating junction temperature range		T_J, T_{STG}	-55 ~ 150	°C

Electrical characteristics (T_A = 25°C)						
Characteristic	**Test condition**	**Symbol**	**Value**			**Unit**
			Min.	**Typ.**	**Max.**	
Drain-source breakdown voltage	V_{GS}=0V, I_D=250µA	$V_{(BR)DSS}$	12	18	-	V
Zero gate voltage drain current	V_{DS}=12V, V_{GS}=0V	I_{DSS}	-	-	1.0	µA
Gate to body leakage current	V_{GS}=±12V, V_{DS}=0V	I_{GSS}	-	-	±100	nA
Gate threshold voltage	V_{DS}=V_{GS}, I_D=250µA	$V_{GS(TH)}$	0.4	0.65	1.0	V
Static drain-source on-state resistance [2]	V_{GS}=4.5V, I_D=4.1A	$R_{DS(ON)}$	-	26	32	mΩ
	V_{GS}=2.5V, I_D=3.0A		-	35	53	

Dynamic electrical characteristics						
Characteristic	**Test condition**	**Symbol**	**Value**			**Unit**
			Min.	**Typ.**	**Max.**	
Input capacitance	V_{DS}=4.0V V_{GS}=0V f=1.0MHz	C_{iss}	-	905	-	pF
Output capacitance		C_{oss}	-	210	-	
Reverse transfer capacitance		C_{rss}	-	195	-	
Total gate charge	V_{DS}=4.0V V_{GS}=4.5V I_D=4.1A	Q_g	-	7.8	15	nC
Gate source charge		Q_{gs}	-	1.2	-	
Gate drain (“Miller”) charge		Q_{gd}	-	1.6	-	

Switching characteristics						
Characteristic	**Test condition**	**Symbol**	**Value**			**Unit**
			Min.	**Typ.**	**Max.**	
Turn on delay time	V_{DD}=4.0V I_D=3.3V R_L=1.2Ω R_G=1.0Ω V_{GEN}=4.5V	$t_{d(on)}$	-	13	20	ns
Turn on rise time		t_r	-	35	53	
Turn off delay time		$t_{d(off)}$	-	32	48	
Turn off fall time		t_f	-	10	20	

Source drain diode characteristics						
Characteristic	**Test condition**	**Symbol**	**Value**			**Unit**
			Min.	**Typ.**	**Max.**	
Maximum continuous drain to source diode forward current	-	I_S	-	-	4.1	A
Maximum pulsed drain to source diode forward current	-	I_{SM}	-	-	16	
Drain-source diode forward voltage	I_S=4.1A, V_{GS}=0V	V_{SD}	-	-	1.2	V
Reverse recovery time	I_S=4.1A, dI/dt=100A/µs, V_{GS}=0V	t_{rr}	-	20	-	ns
Reverse recovery charge		Q_{rr}	-	9.0	-	nC

Notes:

1) The data tested by surface mounted on a 1.0 inch^2 FR-4 board with 2oz copper
2) The data tested by pulsed, pulse width ≤300µs, duty cycle ≤2%
3) The power dissipation is limited by 150°C junction temperature
4) The data is theoretically the same as I_D and I_{DM}, in real applications, should be limited by total power dissipation

Typical characteristics

Output characteristics

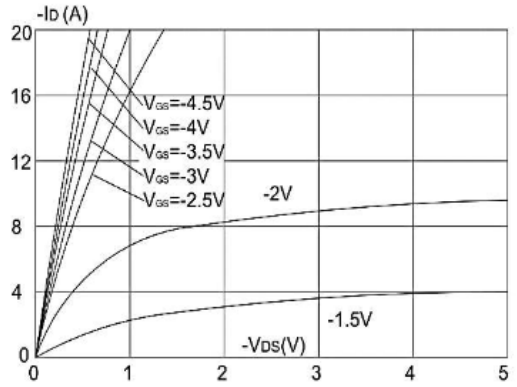

Typical transfer characteristics

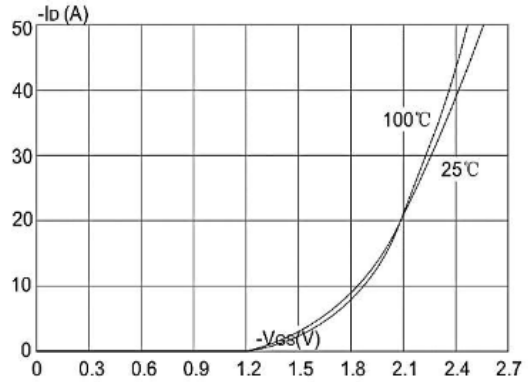

ON-resistance vs. drain current

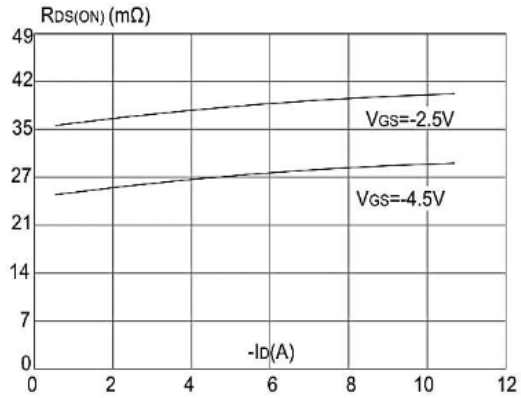

Body diode characteristics

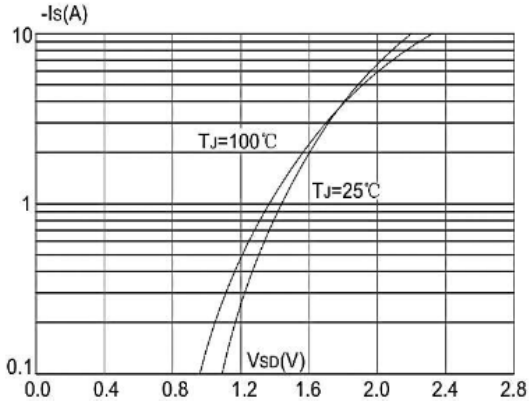

Gate charge characteristics

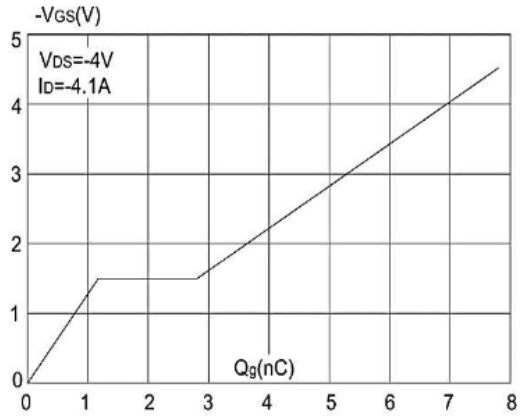

Capacitance characteristics

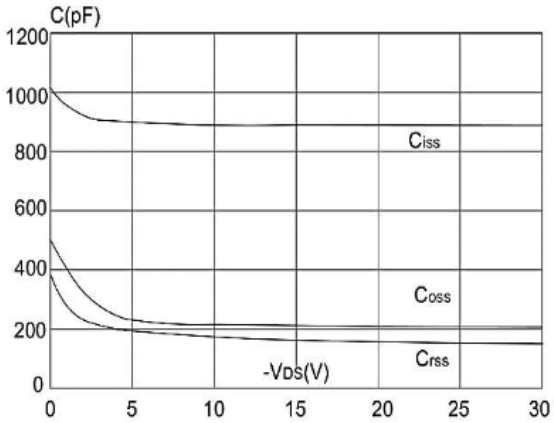

Typical characteristics

Normalized breakdown voltage vs. junction temperature

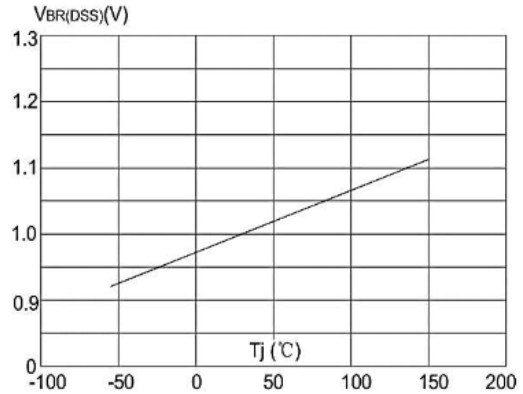

Normalized on resistance vs. junction temperature

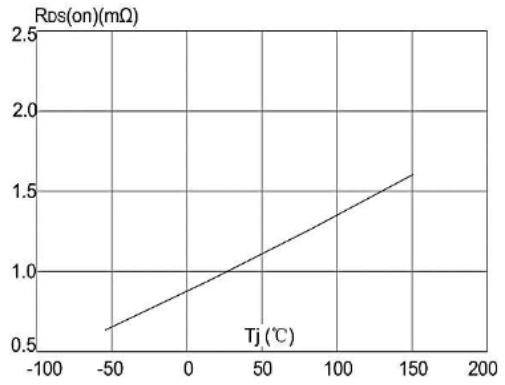

Maximum safe operating area

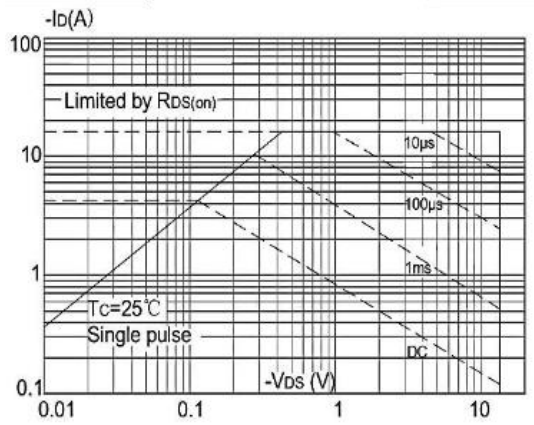

Maximum continuous drain current vs. case temperature

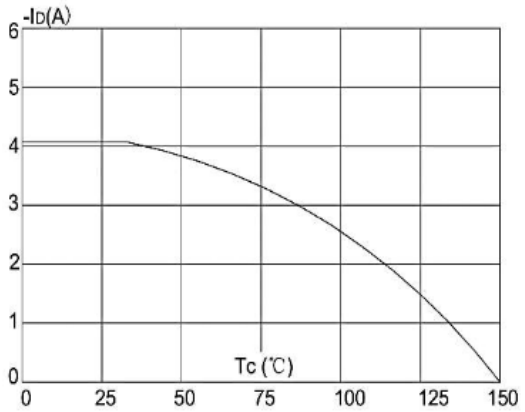

Maximum effective transient thermal impedance, junction-to-case

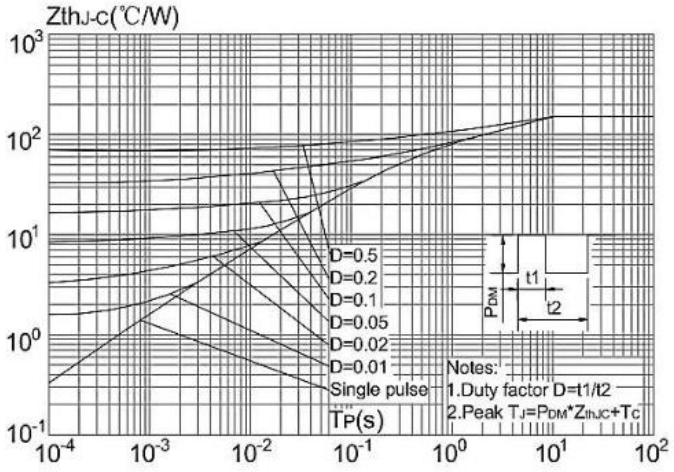

Ordering information			
Part Number	**Marking**	**Package**	**Shipping Quantity**
AKS2311B	2311B	SOT-23	**3000 pcs / reel**

Suggested soldering pad layout

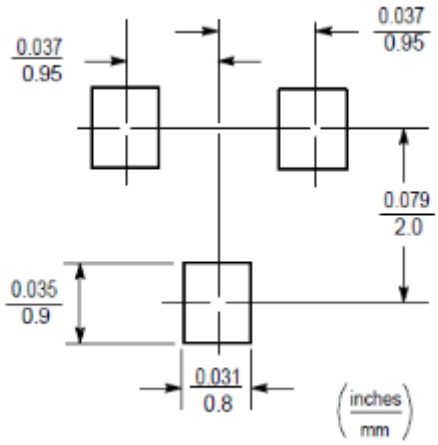

SOT-23

Disclaimer

Akyga semi reserves the right to make changes without notice to any product specification herein, to make corrections, modifications, enhancements or other changes. Akyga semi or anyone on its behalf assumes no responsibility or liability for any errors or inaccuracies. Data sheet specifications and its information contained are intended to provide a product description only. "Typical" parameters which may be included on Akyga semi data sheets and/ or specifications can and do vary in different applications and actual performance may vary over time. Akyga semi does not assume any liability arising out of the application or use of any product or circuit. Akyga semi products are not designed, intended or authorized for use in medical, life-saving implant or other applications intended for life-sustaining or other related applications where a failure or malfunction of component or circuitry may directly or indirectly cause injury or threaten a life without expressed written approval of Akyga semi. Customers using or selling Akyga semi components for use in such applications do so at their own risk and shall agree to fully indemnify Akyga semi and its subsidiaries harmless against all claims, damages and expenditures.