P-Channel Enhancement Mode MOSFET

Primary characteristics			
Symbol	**Parameter**	**Value**	**Unit**
I_D	Continuous drain current (@T_a=25°C)	-4.2	A
V_{DS}	Drain source voltage	-20	V
R_{DSON} @V_{GS}=-4.5V, I_D=-3.0A	Static drain-source on-resistance	<48 Typ. 37	mΩ

Features

- **SOT-23** case for easy automatic insertion
- Pb-free and **RoHS** compliant
- Advanced trench process technology
- High density cell design for ultra low on-resistance

Application

- Load switch for portable devices
- DC/DC converter

Case dimensions

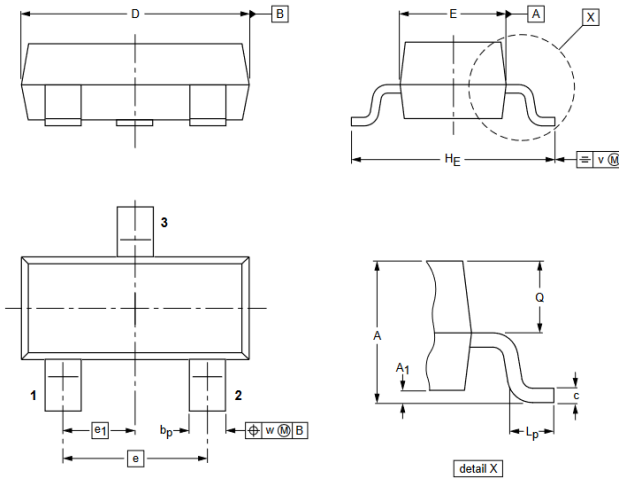

1 – Gate; 2 – Source; 3 - Drain

SOT-23 (TO-236AB)

Unit	A	A_1max	b_p	c	D	E	e	e_1	H_E	L_p	Q	v	w
mm	1.0 ±0.1	0.1	0.43 ±0.05	0.12 ±0.03	2.9 ±0.1	1.3 ±0.1	1.9	0.95	2.3 ±0.2	0.3 ±0.15	0.5 ±0.05	0.2	0.1

Absolute maximum ratings (T_A = 25°C unless otherwise noted)			
Characteristic	**Symbol**	**Value**	**Unit**
Drain-source voltage	V_{DS}	-20	V
Gate-source voltage	V_{GS}	±10	V
Continuous drain current	I_D	-4.2	A
Pulsed drain current [1)]	I_{DM}	-16.8	A
Power Dissipation [2)]	P_D	1.25	W
Operating junction temperature range	T_J, T_{STG}	-50 ~ 150	°C
Thermal resistance junction-ambient [2)]	$R_{\theta JA}$	100	°C/W

Electrical characteristics (T_A = 25°C)						
Characteristic	**Test condition**	**Symbol**	**Value**			**Unit**
			Min.	**Typ.**	**Max.**	
Drain-source breakdown voltage	V_{GS}=0V, I_D=250μA	$V_{(BR)DSS}$	-20	-	-	V
Drain-source leakage current	V_{DS}=-20V, V_{GS}=0V	I_{DSS}	-	-	-1.0	μA
Gate-source leakage current	V_{GS}=±10V, V_{DS}=0V	I_{GSS}	-	-	±100	nA
Gate threshold voltage	V_{DS}=V_{GS}, I_D=-250μA	$V_{GS(TH)}$	-0.4	-0.6	-1.0	V
Drain-source on-state resistance [3]	V_{GS}=-4.5V, I_D=-3.0A	$R_{DS(ON)}$	-	37	48	mΩ
	V_{GS}=-2.5V, I_D=-2.0A		-	45	60	mΩ

Dynamic electrical characteristics						
Characteristic	**Test condition**	**Symbol**	**Value**			**Unit**
			Min.	**Typ.**	**Max.**	
Input capacitance	V_{DS}=-10V V_{GS}=0V f=1.0MHz	C_{iss}	-	760	-	pF
Output capacitance		C_{oss}	-	94	-	pF
Reverse transfer capacitance		C_{rss}	-	76	-	pF
Total gate charge	V_{DS}=-10V V_{GS}=-4.5V I_D=3.0A	Q_g	-	7.8	-	nC
Gate source charge		Q_{gs}	-	0.9	-	nC
Gate drain charge		Q_{gd}	-	1.8	-	nC

Switching characteristics						
Characteristic	**Test condition**	**Symbol**	**Value**			**Unit**
			Min.	**Typ.**	**Max.**	
Turn on delay time	V_{DS}=-10V V_{GS}=-4.5V I_D=-2.0A R_G=3.3Ω R_L=1.2Ω	$t_{d(on)}$	-	5.5	-	ns
Turn on rise time		t_r	-	3.9	-	ns
Turn off delay time		$t_{d(off)}$	-	11.3	-	ns
Turn off fall time		t_f	-	36	-	ns

Source drain diode characteristics						
Characteristic	**Test condition**	**Symbol**	**Value**			**Unit**
			Min.	**Typ.**	**Max.**	
Source drain current (body diode)	T_A=25°C	I_{SD}	-	-	-2.0	A
Drain-source diode forward voltage	I_S=-4.0A, V_{GS}=0V	V_{SD}	-	-0.87	-1.2	V

Notes:

1) Pulse width limited by maximum allowable junction temperature
2) The value of P_D&$R_{\theta JA}$ is measured with the device mounted on 1 in^2 FR-4 board with 2oz. copper, double sided, in a still air environment with T_a=25°C
3) Pulse test; pulse width≤300μs, duty cycle≤2%

Stresses exceeding Maximum Ratings may damage the device. Maximum Ratings are stress ratings only. Functional operation above the Recommended Operating Conditions is not implied. Extended exposure to stresses above the Recommended Operating Conditions may affect device reliability.

Typical characteristics

Typical output characteristics

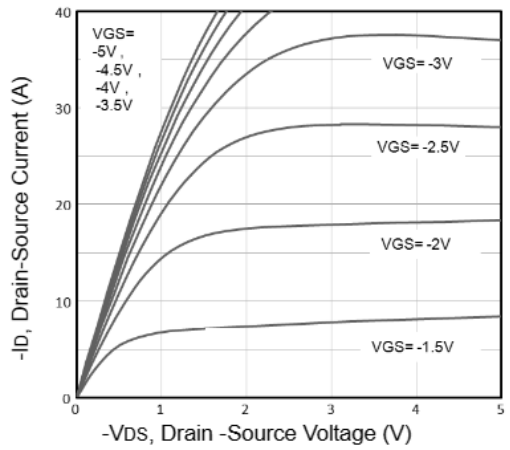

$V_{GS(TH)}$ voltage vs. temperature

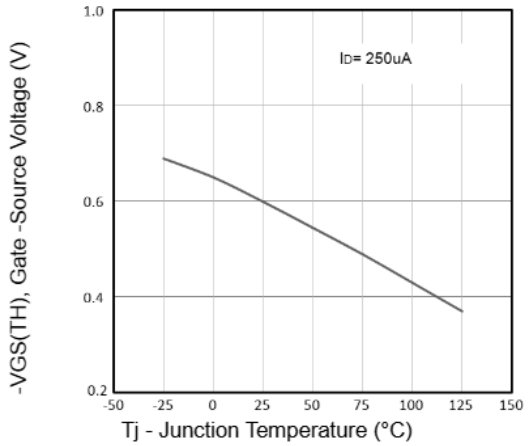

Typical transfer characteristics

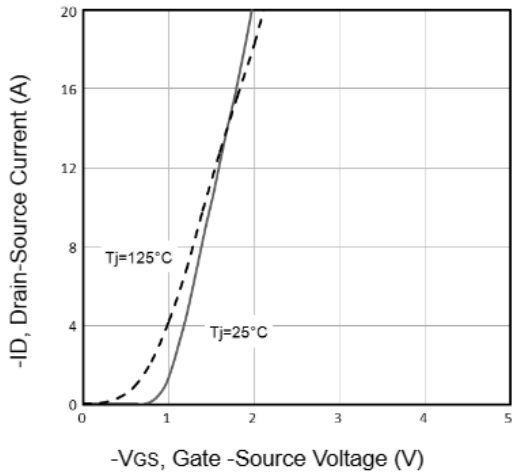

On-resistance vs. drain current and gate voltage

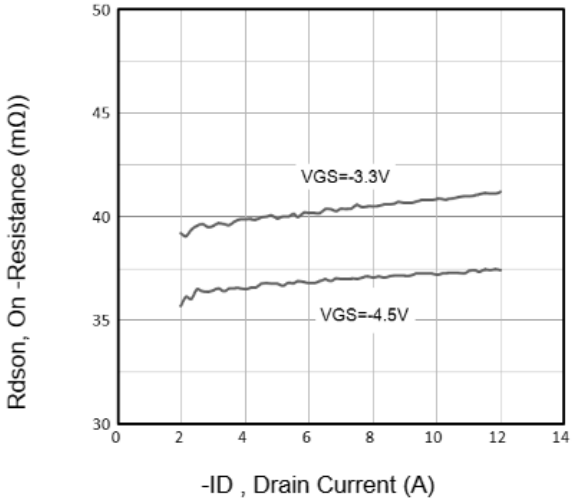

Typical source-drain diode forward voltage

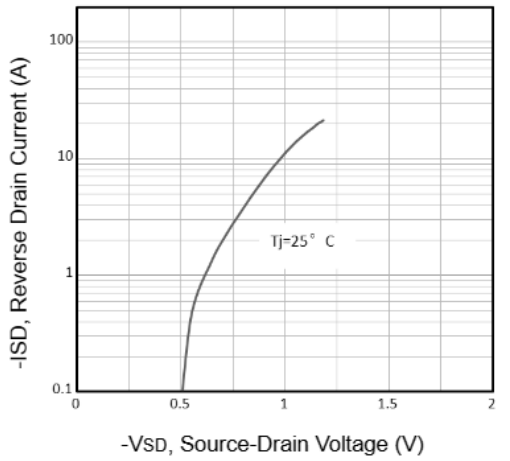

Maximum safe operating area

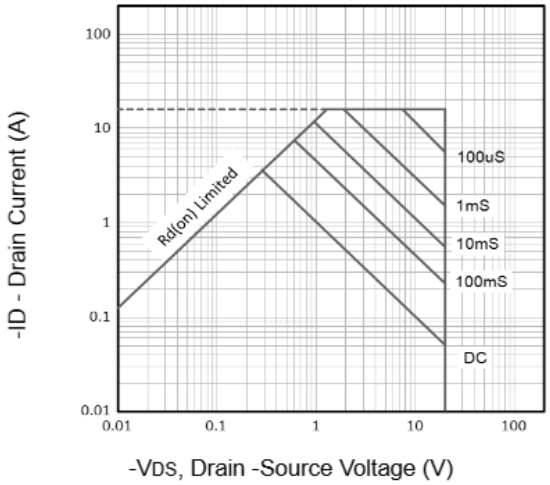

Typical characteristics

Typical capacitance vs. drain-source voltage

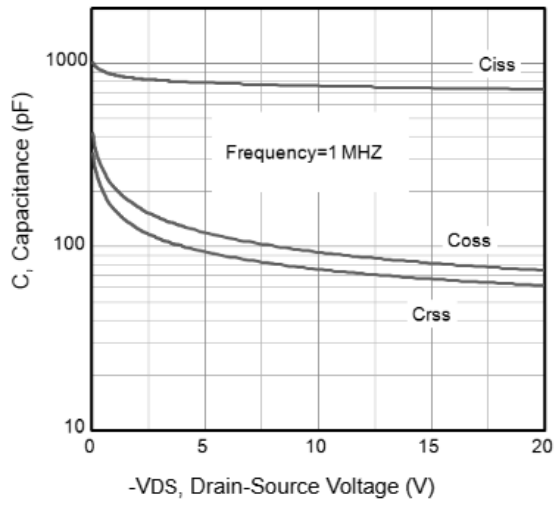

Typical gate charge vs. gate-source voltage

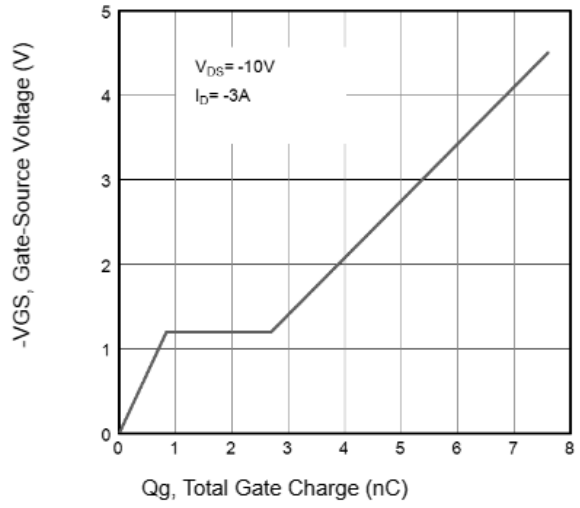

Normalized maximum transient thermal impedance

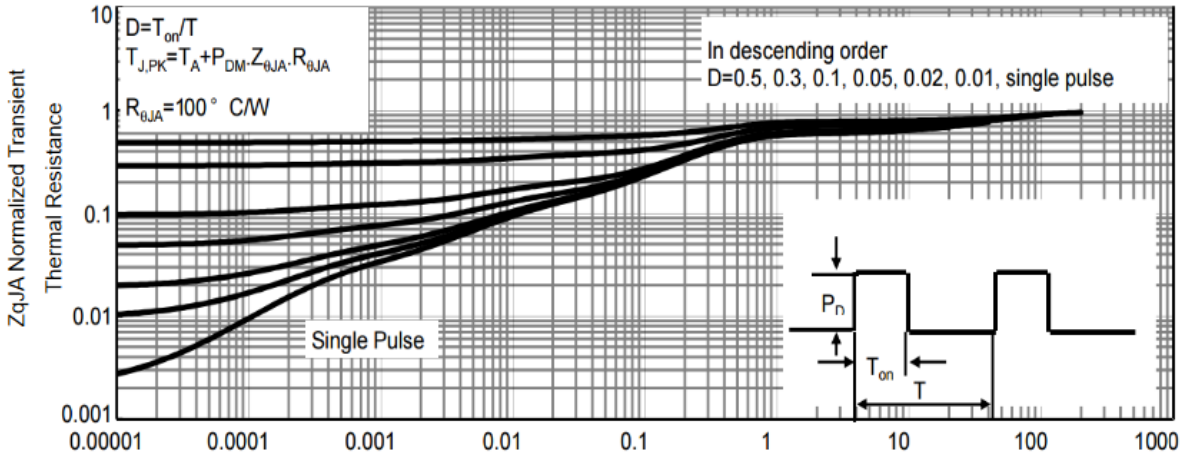

Switching time test circuit and waveforms

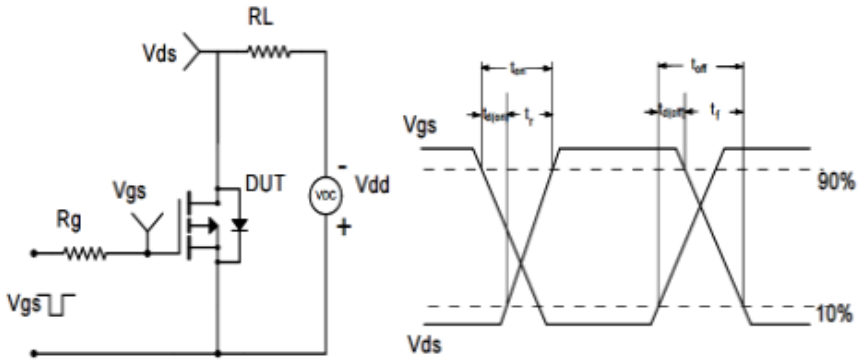

Fig10. Switching Time Test Circuit and waveforms

Ordering information			
Part Number	**Package**	**Shipping Quantity**	**Dimensions**
AKS2305	SOT-23	**3000 pcs / reel**	---

Suggested soldering pad layout

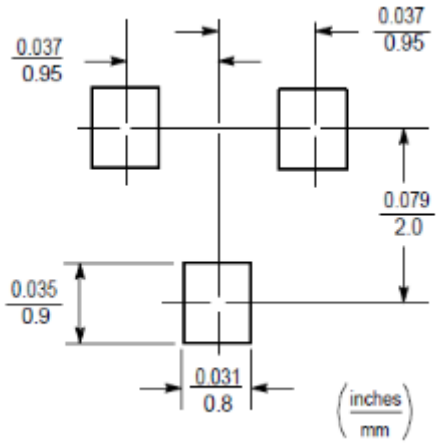

SOT-23

Disclaimer

Akyga semi reserves the right to make changes without notice to any product specification herein, to make corrections, modifications, enhancements or other changes. Akyga semi or anyone on its behalf assumes no responsibility or liability for any errors or inaccuracies. Data sheet specifications and its information contained are intended to provide a product description only. "Typical" parameters which may be included on Akyga semi data sheets and/ or specifications can and do vary in different applications and actual performance may vary over time. Akyga semi does not assume any liability arising out of the application or use of any product or circuit. Akyga semi products are not designed, intended or authorized for use in medical, life-saving implant or other applications intended for life-sustaining or other related applications where a failure or malfunction of component or circuitry may directly or indirectly cause injury or threaten a life without expressed written approval of Akyga semi. Customers using or selling Akyga semi components for use in such applications do so at their own risk and shall agree to fully indemnify Akyga semi and its subsidiaries harmless against all claims, damages and expenditures.