30V N-CHANNEL ENHANCEMENT MODE MOSFET

MAIN CHARACTERISTICS

I_D	70A
V_{DSS}	30V
R_{DSON}-typ(@V_{GS}=10V)	< 4.5mΩ(Type:3.5 mΩ)

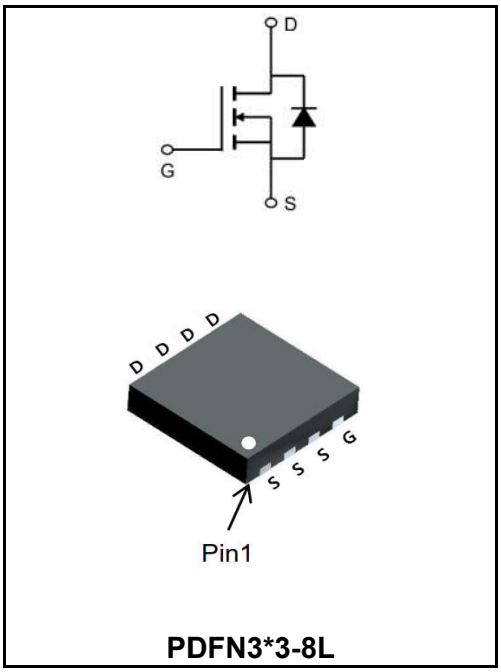

PDFN3*3-8L

lead-free ROHS

Application

- Battery protection
- Load switch
- Uninterruptible power supply

Product Specification Classification

Part Number	Package	Marking	Pack
70N03DF	PDFN3*3-8L	70N03DF XXXXX	5000PCS/Tape

Maximum Ratings at Tc=25°C unless otherwise specified

Characteristics	Symbols	Value	Units
Drain-Source Voltage	V_{DS}	30	V
Gate - Source Voltage	V_{GS}	±20	V
Continuous Drain Current, V_{GS} @ 10V[1] @T_C=25℃	I_D	70	A
Continuous Drain Current, V_{GS} @ 10V[1]@T_C=100℃	I_D	51	A
Pulsed Drain Current[2]	I_{DM}	160	A
Single Pulse Avalanche Energy[3]	E_{AS}	315	mJ
Avalanche Current	I_{AS}	38	A
Total Power Dissipation[4] @T_C=25℃	P_D	59	W
Storage Temperature Range	T_{STG}	-55 to +150	°C
Operating Junction Temperature Range	T_J	-55 to +150	°C
Thermal Resistance, Junction-to-Ambient [1]	$R_{\theta JA}$	62	°C/W
Thermal Resistance Junction-Case[1]	$R_{\theta JC}$	2.1	°C/W

Maximum Ratings at Tc=25°C unless otherwise specified

Characteristics	Test Condition	Symbols	Min	Typ	Max	Units
Drain-Source Breakdown Voltage	V_{GS}=0V, I_D=250uA	BV_{DSS}	30	33	-	V
Static Drain-Source On-Resistance	V_{GS}=10V, I_D=30A	$R_{DS(ON)}$	-	3.5	4.5	mΩ
	V_{GS}=4.5V, I_D=15A		-	6.5	8.5	
Gate -Threshold Voltage	V_{DS}=V_{GS}, I_D=250uA	$V_{GS(th)}$	1.0	1.6	2.5	V
$V_{GS(th)}$ Temperature Coefficient		$V_{GS(th)}$	-	-6.16	-	mV/°C
Drain -Source Leakage Current	V_{DS}=24V , V_{GS}=0V , T_J=25℃	I_{DSS}	-	-	1	μA
	V_{DS}=24V , V_{GS}=0V , T_J=55℃		-	-	5	
Gate-Source Leakage Current	V_{GS}=±20V, V_{DS}=0V	I_{GSS}	-	-	±100	nA
Forward Transconductance	V_{DS}=5V, I_D=30A	g_{FS}	-	22	-	S
Gate Resistance	V_{DS}=0V , V_{GS}=0V , f=1MHz	R_g	-	1.7	3.4	Ω
Total Gate Charge(4.5V)	V_{DS}=15V V_{GS}=4.5V I_D=15A	Q_g	-	20	-	nC
Gate-Source Charge		Q_{gs}	-	7.6	-	
Gate-Drain Charge		Q_{gd}	-	7.2	-	
Turn-on delay time	V_{DD}=15V V_{GS}=10V R_G=3.3Ω I_D=15A	$t_{d(on)}$	-	7.8	-	ns
Rise Time		T_r	-	15	-	
Turn-Off Delay Time		$t_{d(OFF)}$	-	37.3	-	
Fall Time		t_f	-	10.6	-	
Input Capacitance	V_{DS}=15V V_{GS}=0V f=1.0MHz	C_{iss}	-	2295	-	pF
Output Capacitance		C_{oss}	-	267	-	
Reverse Transfer Capacitance		C_{rss}	-	210	-	
Continuous Source Current[1,5]	V_G=V_D=0V , Force Current	I_S	-	-	80	A
Pulsed Source Current[2,6]		I_{SM}	-	-	160	A
Diode Forward Voltage [2]	V_{GS}=0V , I_S=1A , T_J=25℃	V_{SD}	-	-	1	V
Reverse Recovery Time	IF=30A , dI/dt=100A/μs , TJ=25℃	t_{rr}	-	14	-	nS
Reverse Recovery Charge		Q_{rr}	-	5	-	nC

Note :

1、The data tested by surface mounted on a 1 inch2 FR-4 board with 2OZ copper.

2、The data tested by pulsed , pulse width ≦ 300us , duty cycle ≦ 2%

3、The EAS data shows Max. rating . The test condition is VDD=24V,VGS=10V,L=0.5mH,IAS=38A

4、The power dissipation is limited by 175℃ junction temperature

5、The data is theoretically the same as ID and IDM , in real applications , should be limited by total power dissipation.

Typical Characteristics

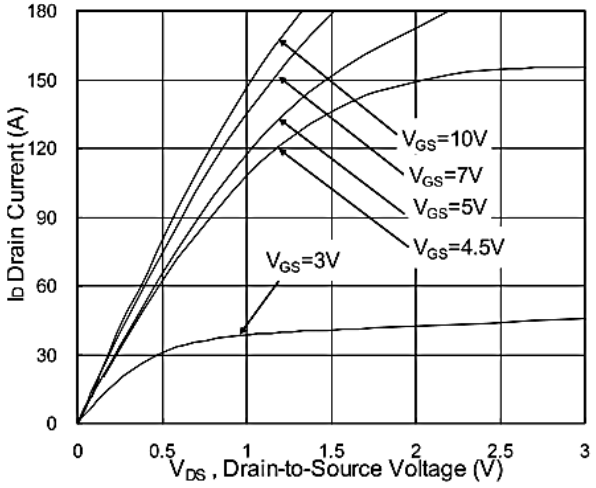

Fig.1 Typical Output Characteristics

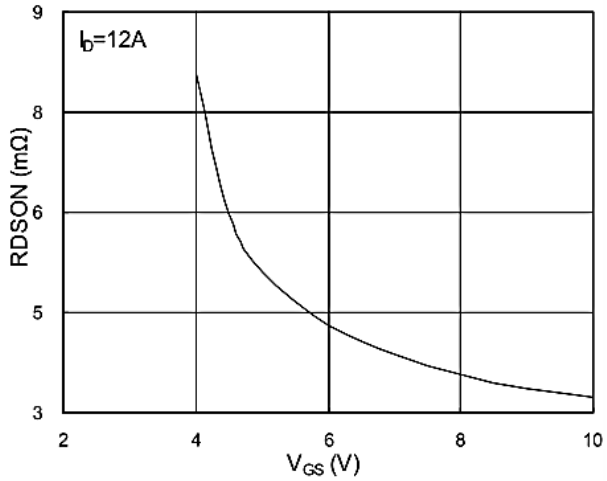

Fig.2 On-Resistance vs. G-S Voltage

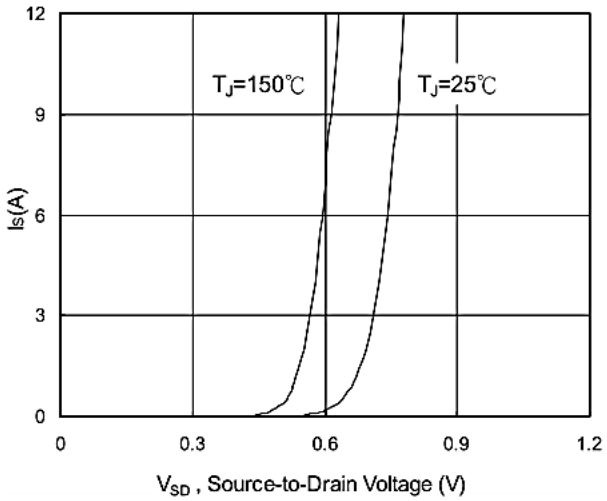

Fig.3 Forward Characteristics of Reverse

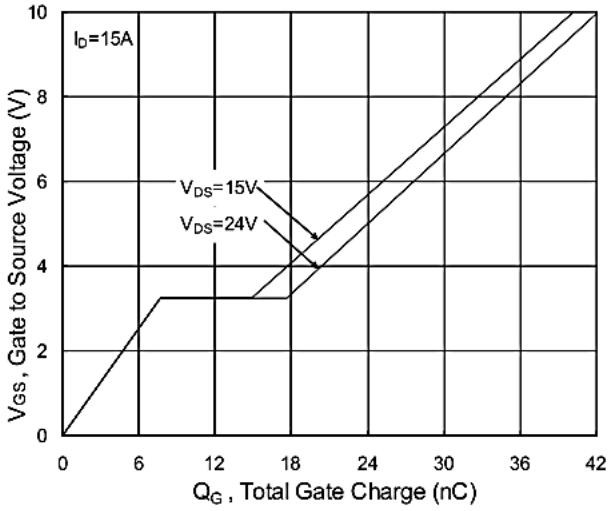

Fig.4 Gate-Charge Characteristics

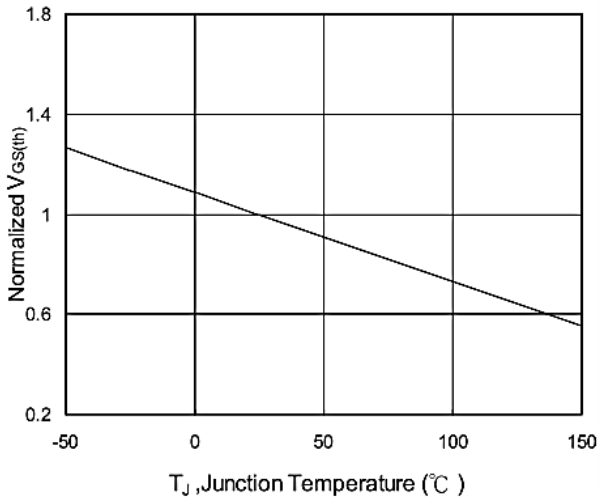

Fig.5 Normalized $V_{GS(th)}$ vs. T_J

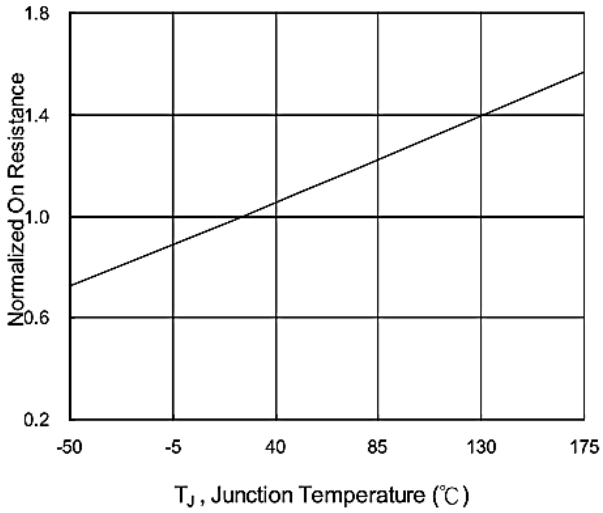

Fig.6 Normalized R_{DSON} vs. T_J

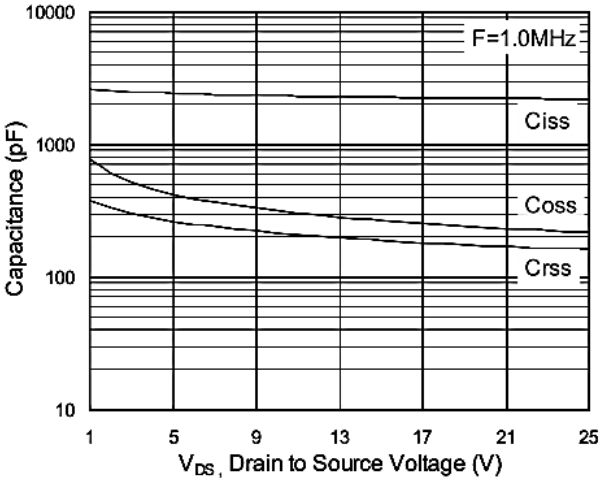

Fig.7 Capacitance

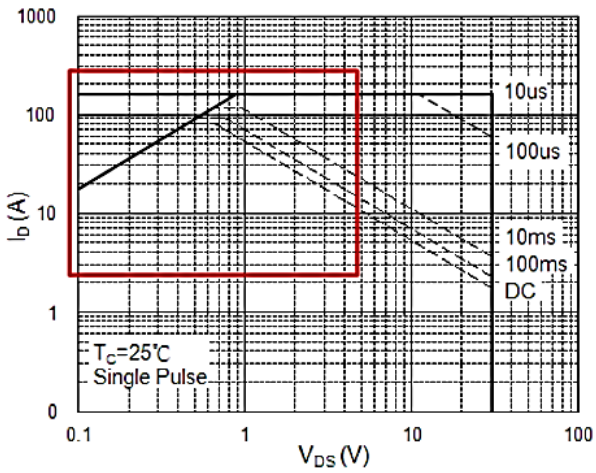

Fig.8 Safe Operating Area

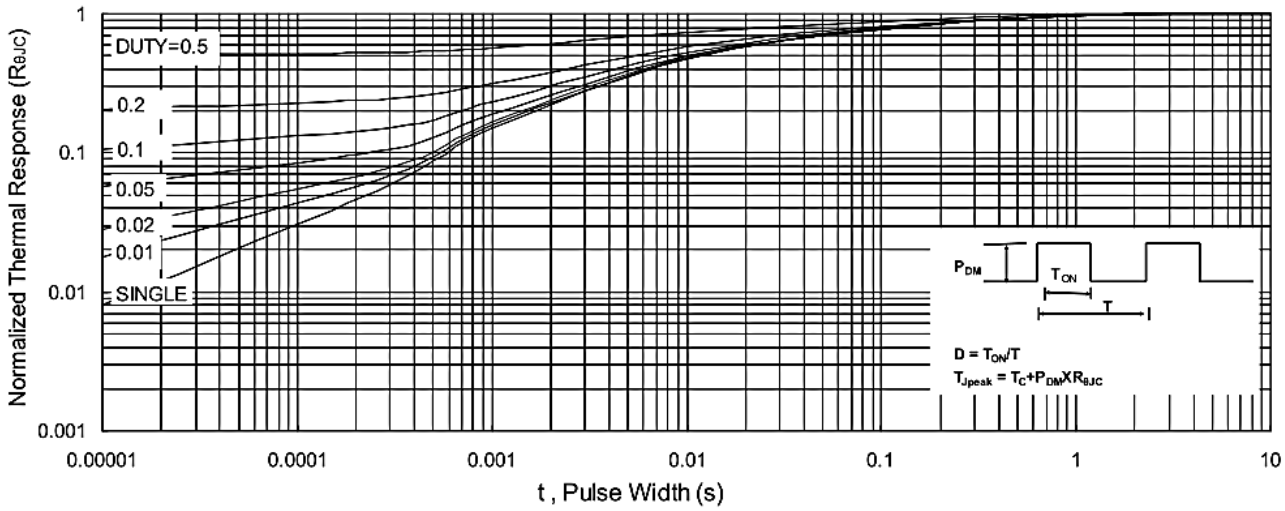

Fig.9 Normalized Maximum Transient Thermal Impedance

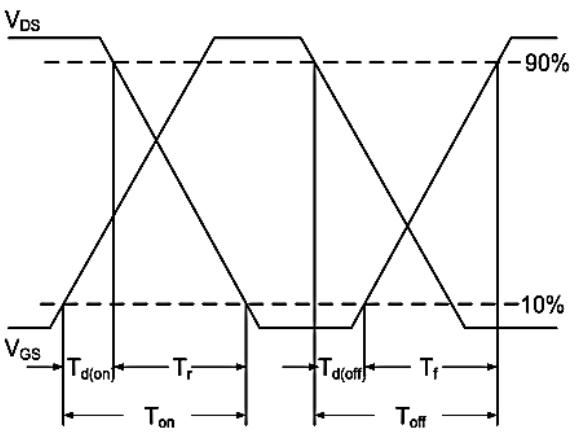

Fig.10 Switching Time Waveform

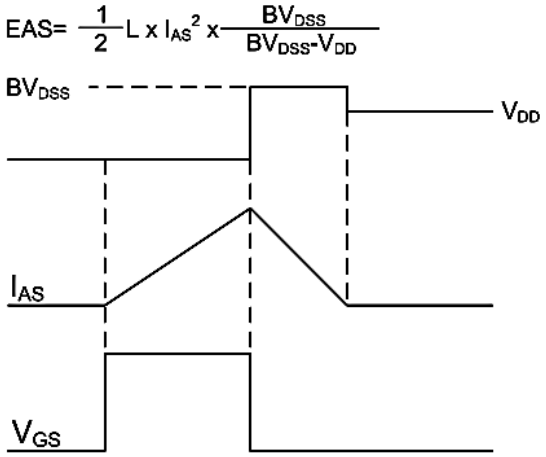

Fig.11 Unclamped Inductive Switching Waveform

Package Outline Dimensions Millimeters

PDFN3*3-8L

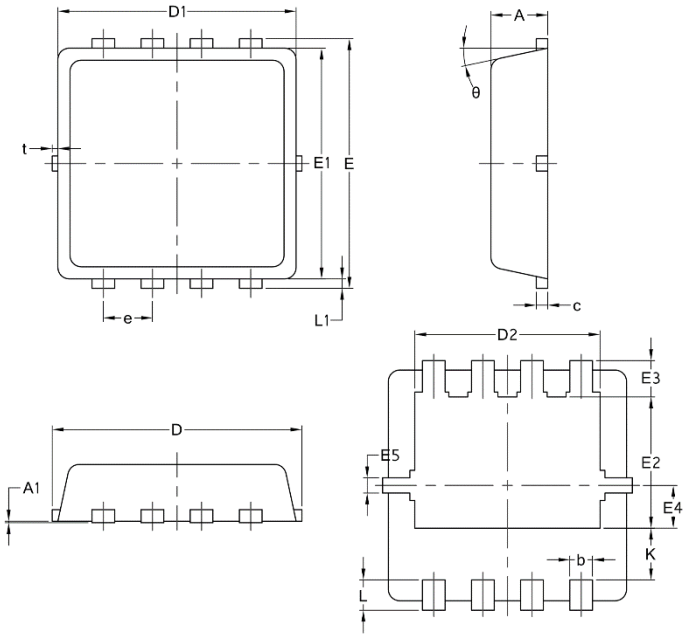

Symbol	Common		
	mm		
	Mim	Nom	Max
A	0.70	0.75	0.85
A1	/	/	0.05
b	0.20	0.30	0.40
c	0.10	0.152	0.25
D	3.15	3.30	3.45
D1	3.00	3.15	3.25
D2	2.29	2.45	2.65
E	3.15	3.30	3.45
E1	2.90	3.05	3.20
E2	1.54	1.74	1.94
E3	0.28	0.48	0.65
E4	0.37	0.57	0.77
E5	0.10	0.20	0.30
e	0.60	0.65	0.70
K	0.59	0.69	0.89
L	0.30	0.40	0.50
L1	0.06	0.125	0.20
t	0	0.075	0.13
Φ	10	12	14