N-Channel Enhancement Mode MOSFET

Primary characteristics			
Symbol	**Parameter**	**Value**	**Unit**
I_D	Continuous drain current (@T_C=25°C)	10	A
V_{DS}	Drain source voltage	60	V
R_{DSON}-typ(@V_{GS}=10V)	Static drain-source on-resistance	<36 Typ. 28	mΩ

Features

- **SOT-223** case for easy automatic insertion
- Pb-free and **RoHS** compliant

Application

- LED lamp
- Load switch
- Uninterruptible power supply

Case dimensions

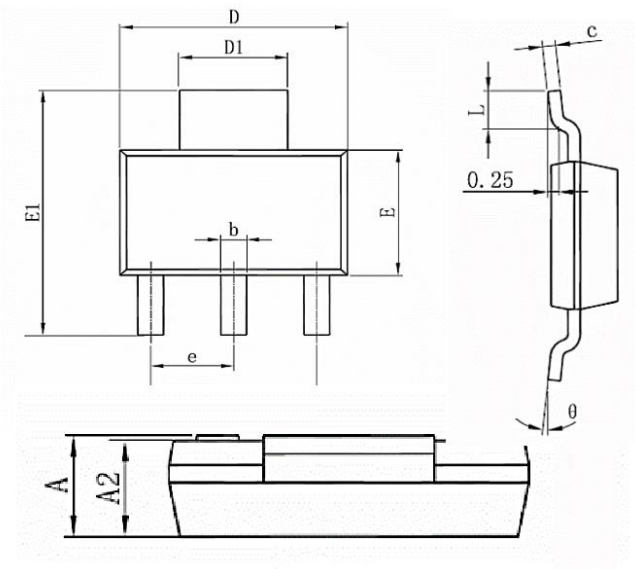

SOT-223

Unit	A	A2	b	c	D	D1	E	e	e1	L	θ
mm	1.66 ±0.14	1.6 ±0.1	0.74 ±0.08	0.30 ±0.05	6.3 ±0.1	3.0 ±0.1	3.5 ±0.2	2.3 (BSC)	4.6 ±0.1	1.0 +0.15 -0.10	5° ±5

Maximum ratings (T_C = 25°C)			
Characteristics	**Symbol**	**Value**	**Unit**
Drain-source voltage	V_{DS}	60	V
Gate-source voltage	V_{GS}	±20	V
Continuous drain current, V_{GS} @10V[1] @T_C=25°C	I_D	10	A
Continuous drain current, V_{GS} @10V[1] @T_C=100°C	I_D	8	A
Pulsed drain current	I_{DM}	30	A
Single pulse avalanche energy	E_{AS}	22	mJ
Power Dissipation @T_C=25°C	P_D	31.3	W
Operating junction temperature range	T_J, T_{STG}	-55 ~ 175	°C
Thermal resistance junction-ambient[1]	$R_{\theta JA}$	60	°C/W
Thermal resistance junction-case[1]	$R_{\theta JC}$	4	°C/W

Maximum ratings (T_C = 25°C)						
Characteristics	**Test condition**	**Symbol**	**Value**			**Unit**
			Min.	**Typ.**	**Max.**	
Drain-source breakdown voltage	V_{GS}=0V, I_D=250μA	BV_{DSS}	60	65	-	V
BVDSS temperature coefficient	Reference to 25°C, I_D=1mA	$\Delta BV_{DSS/\Delta TJ}$	-	0.044	-	V/°C
Static drain-source on-resistance[2]	V_{GS}=10V, I_D=15A	$R_{DS(ON)}$	-	28	36	mΩ
	V_{GS}=4.5V, I_D=7A		-	38	45	
Gate-threshold voltage	V_{DS}=V_{GS}, I_D=250μA	$V_{GS(th)}$	1.2	1.6	2.5	V
V_{GS}(th) temperature coefficient		$\Delta V_{GS(th)}$	-	-4.8	-	mV/°C
Drain-source leakage current	V_{DS}=48V, V_{GS}=0V, T_J=25°C	I_{DSS}	-	-	1	μA
	V_{DS}=48V, V_{GS}=0V, T_J=55°C		-	-	5	
Gate-source leakage current	V_{GS}=±20V, V_{DS}=0V	I_{GSS}	-	-	±100	nA
Forward transconductance	V_{DS}=5V, I_D=15A	g_{FS}	-	25.3	-	S
Gate resistance	V_{DS}=0V, V_{GS}=0V, f=1MHz	R_g	-	2.5	-	Ω
Total gate charge (10V)	V_{DS}=48V V_{GS}=10V I_D=15A	Q_g	-	19	-	nC
Gate-source charge		Q_{gs}	-	2.5	-	
Gate-drain charge		Q_{gd}	-	5	-	
Turn-on delay time	V_{DD}=30V V_{GS}=10V R_G=3.3Ω I_D=15A	$T_{d(on)}$	-	2.8	-	ns
Rise time		T_r	-	16.6	-	
Turn-off delay time		$t_{d(OFF)}$	-	21.2	-	
Fall time		t_f	-	5.6	-	
Input capacitance	V_{DS}=15V V_{GS}=0V f=1.0MHz	C_{iss}	-	1027	-	pF
Output capacitance		C_{oss}	-	65	-	
Reverse transfer capacitance		C_{rss}	-	46	-	
Continuous source current[1, 6]	V_G=V_D=0V, force current	I_S	-	-	20	A
Pulsed source current[2, 6]		I_{SM}	-	-	40	A
Diode forward voltage[2]	V_{GS}=0V, I_S=1A, T_J=25°C	V_{SD}	-	-	1.2	V
Reverse recovery time	I_F=15A , dI/dt=100A/μs , T_J=25°C	t_{rr}	-	12.2	-	ns
Reverse recovery charge		Q_{rr}	-	7.3	-	nC

Note :

1. The data tested by surface mounted on a 1 inch^2 FR-4 board with 2OZ copper.
2. The data tested by pulsed, pulse width. The EAS data shows max. rating.
3. The test cond. ≦ 300μs duty cycle ≦ 2%, duty cycle is T_J =25°C, V_{DD} =48V, V_G =10V, R_G =25Ω, L=0.1mH, I_{AS} =13A.
4. The power dissipation is limited by 175°C junction temperature.
5. The data is theoretically the same as I_D and I_{DM}, in real applications, should be limited by total power dissipation.

Typical characteristics

Typical output characteristics

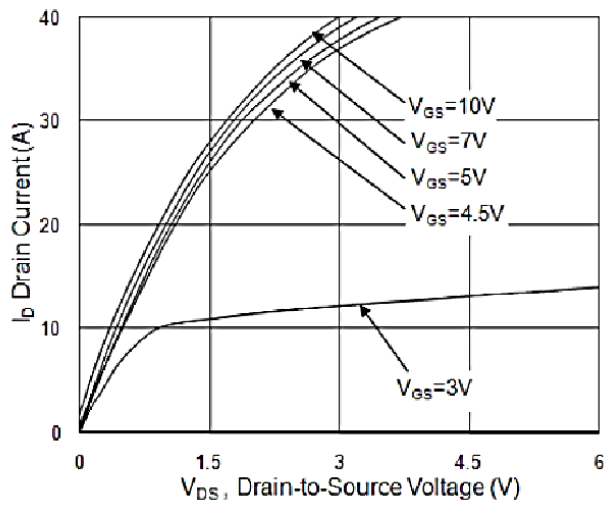

On-resistance vs. gate-source

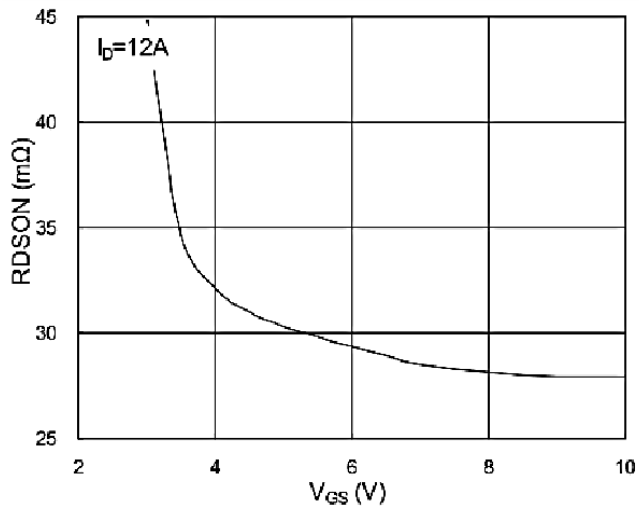

Forward characteristics

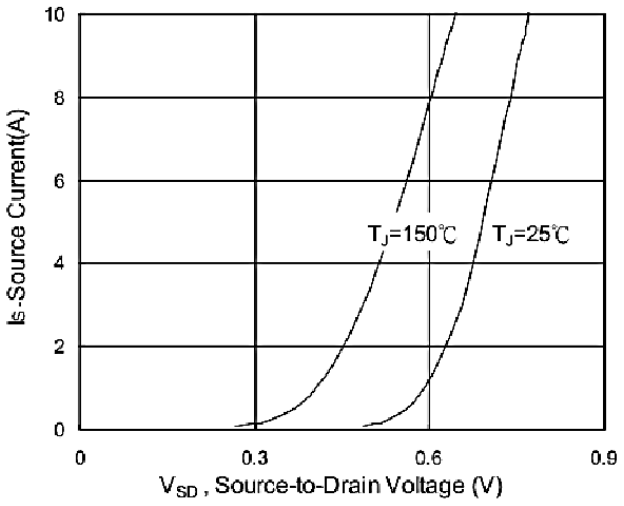

Gate-charge characteristics

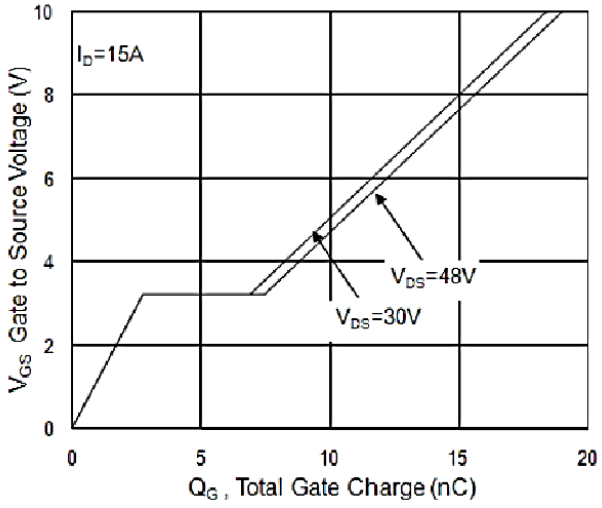

Typical characteristics

Normalized $V_{GS(th)}$ vs. T_J

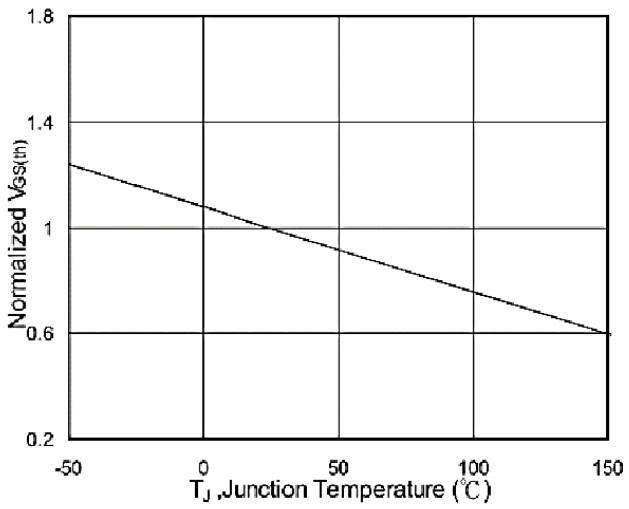

Normalized R_{DSON} vs. T_J

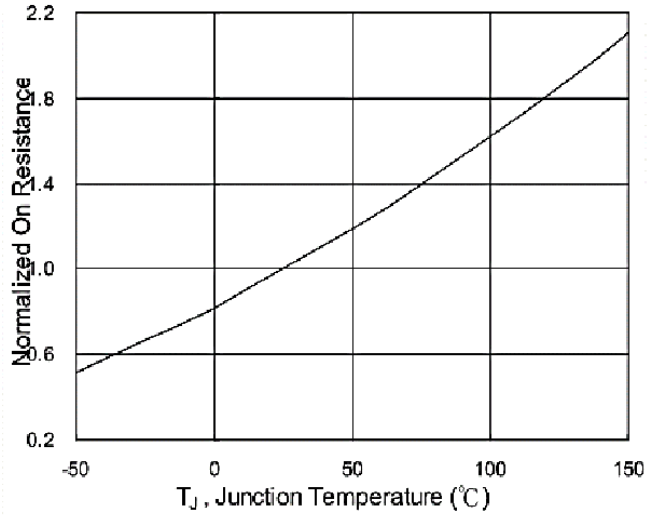

Capacitance

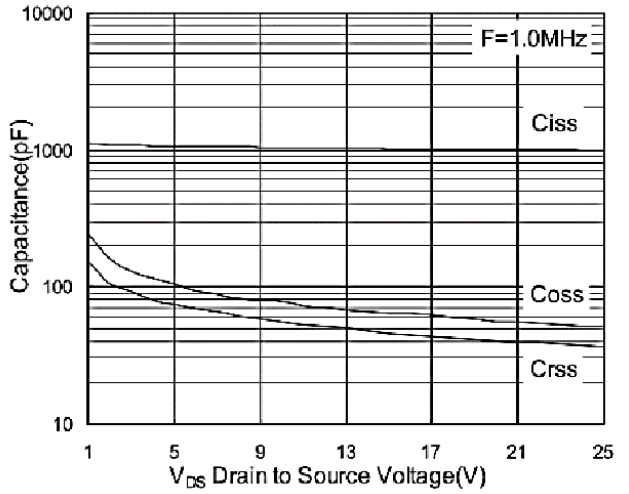

Safe operating area

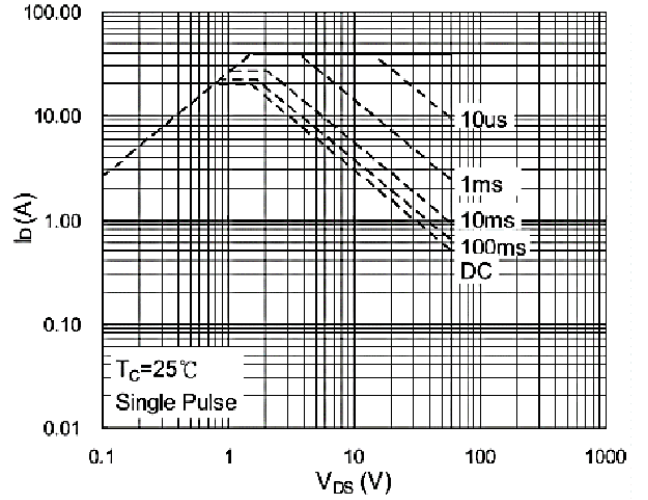

Normalized maximum transient thermal impedance

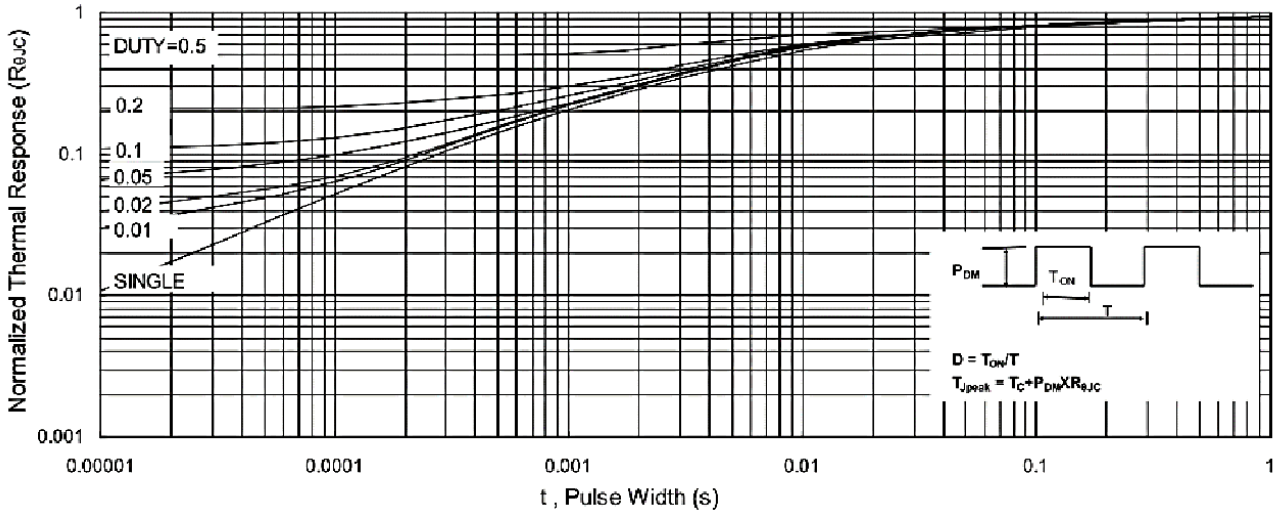

Switching time waveform

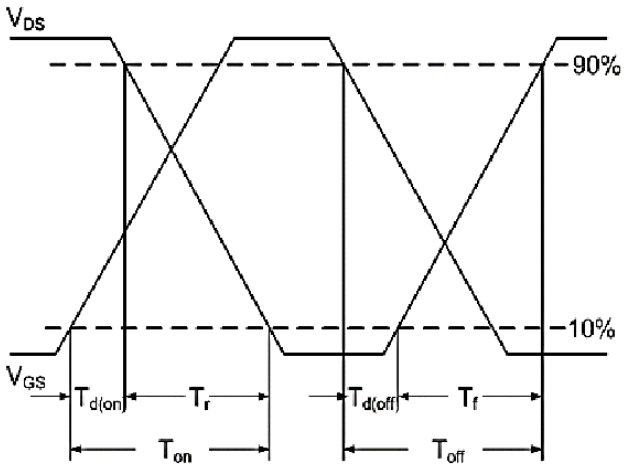

Unclamped inductive switching waveform

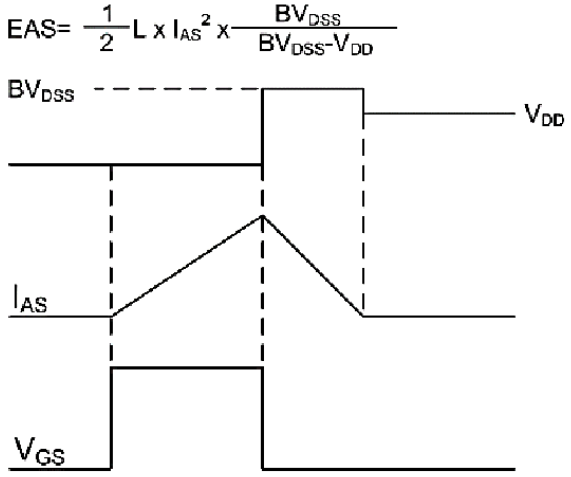

Ordering information			
Part Number	**Package**	**Shipping Quantity**	**Dimensions**
10N06MSI	SOT-223	**3000 pcs / reel**	---

Suggested soldering pad layout

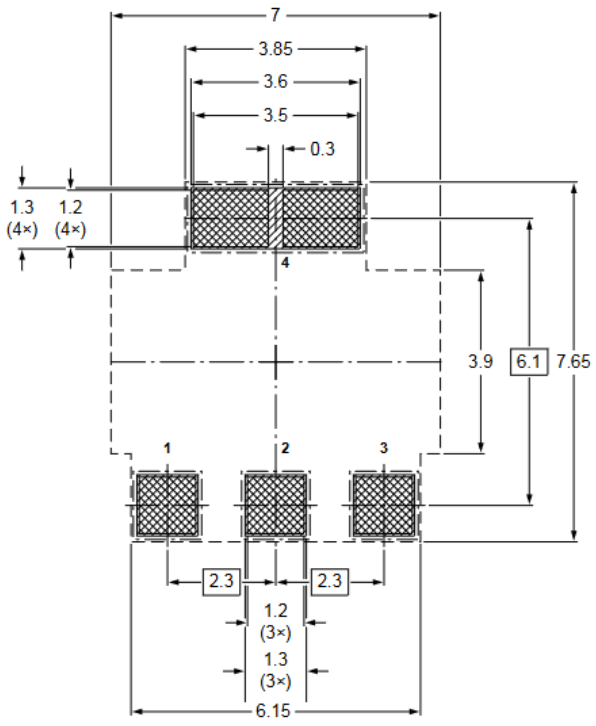

SOT-223

Disclaimer

Akyga semi reserves the right to make changes without notice to any product specification herein, to make corrections, modifications, enhancements or other changes. Akyga semi or anyone on its behalf assumes no responsibility or liability for any errors or inaccuracies. Data sheet specifications and its information contained are intended to provide a product description only. "Typical" parameters which may be included on Akyga semi data sheets and/ or specifications can and do vary in different applications and actual performance may vary over time. Akyga semi does not assume any liability arising out of the application or use of any product or circuit. Akyga semi products are not designed, intended or authorized for use in medical, life-saving implant or other applications intended for life-sustaining or other related applications where a failure or malfunction of component or circuitry may directly or indirectly cause injury or threaten a life without expressed written approval of Akyga semi. Customers using or selling Akyga semi components for use in such applications do so at their own risk and shall agree to fully indemnify Akyga semi and its subsidiaries harmless against all claims, damages and expenditures.